YIY

Inverter / MPPT Charger / AC Charger

Start Digital Power Supply

ZHEJIANG YIYEN HOLDING GROUP

Zhejiang YIYEN HOLDING GROUP is a high-tech company that focuses on researching and manufacturing power electronic technology，integrating design, research and development, manufacturing, sales and service. YIYEN is dedicated to reducing electricity costs, improving electricity efficiency, and providing core power equipment and system solutions for the energy Internet of Things.With electrochemical energy storage and energy efficiency management as its core industry, YIYEN provides energy-saving service for power system, communication system, financial system, education system, medical system, and large industrial and mining enterprises.

Energy storage and energy efficiency management are critical reducing carbon emissions and promoting sustainable development. YIYEN's mission is to help make energy and ecology more harmonious by providing advanced energy storage and power quality solutions which improve efficiency, reduce costs, and promote clean energy.YIYEN will always continue to devote ourselves to the research and development and manufacturing of power electronic technology, and be committed to delivering cutting-edge solutions helping customers meet their energy management goals while contributing to a more sustainable future for all.

300+
Staff

30000m²+
Plant Area

15 years +
Years Experience

100,000+ /year
Unit Shipments

ENTERPRISE ARCHITECTURE

Headquarters

ZHEJIANG YIYEN HOLDING GROUP

Intelligent Manufacturing	Lishui Yiyen Technology CO.,LTD	Factory
Globalization Channel	Wenzhou Yiyen Supply Chain Management CO.,LTD	Marketing/Sales/Sourcing Total Solutions and Technical Services
Investment Operation	Wenzhou Yiyen Energy Development CO.,LTD	EPC Service Provider for New Energy and Energy Storage Plants Contract Energy Management (Domestic Only)
R&D	Nanjing Branch Shenzhen Branch Hangzhou Branch	R&D Center

50+
R&D Staff

130+
Export Countries

100+
Intellectual Properties

BMS
12V~1500V
Voltage Class

Qualification Certification

ISO9001

QUALITY MANAGEMENT SYSTEM CERTIFICATE

Certificate No. : 20222Q21193R0S

We hereby certify that the organization:

LISHUI YIYEN TECHNOLOGY COMPANY LIMITED

Unified social credit code: 91331127MA2E079Y8T

is in conformity with Quality Management System Standard:

GB/T19001-2016 idt ISO9001:2015

The certificate is valid to the following products/service:

The assembling of Voltage Stabilizer、Inverter、Photovoltaic Equipment（MPPT Solar Charger、PCS）、 Uninterruptible Power Supply、Emergency Power Supply、Battery Pack Energy Storage System、Battery Management System（BMS）

Registration Address/Audit Address: No.77,Xiang Long Road,Lian Du Zone,Lishui City,Zhejiang Province, China.

Date of Issue: 26-09-2022

Date of Expiry: 25-09-2025

Date of Initial: 26-09-2022

Issued By

中国认可 国际互认 管理体系 MANAGEMENT SYSTEM CNAS C197-M

The audit of validity of the certificate, the certificate shall be at least once a year. The effectiveness of the Certificate is subject to QR Code in the lower left corner. Meanwhile, you can search the website of certification body: www.qpc.org.cn or search the CNCA website: www.cnca.gov.cn

ZHEJIANG QUANPIN CERTIFICATION CO.,LTD.

Room 603, Floor 6, Building 1, No 74, Puyan Road, Puyan Street, Binjiang District, Hangzhou City, Zhejiang Province, China 310053 WEB: Http://www.qpc.org.cn

ISO45001

OCCUPATIONAL HEALTH AND SAFETY MANAGEMENT SYSTEM CERTIFICATE

Certificate No.: 20222S20467R0S

We hereby certify that the organization:

LISHUI YIYEN TECHNOLOGY COMPANY LIMITED

Unified social credit code: 91331127MA2E079Y8T

is in conformity with Occupational Health Safety Management System Standard:

GB/T45001-2020 idt ISO45001:2018

The certificate is valid to the following products/service:

The assembly and related management activities of Voltage Stabilizer、Inverter、Photovoltaic Equipment（MPPT Solar Charger、PCS）、Uninterruptible Power Supply、Emergency Power Supply、Battery Pack Energy Storage System、Battery Management System（BMS）

Registration Address/Audit Address: No.77,Xiang Long Road,Lian Du Zone,Lishui City,Zhejiang Province, China.

Date of Issue: 26-09-2022

Date of Expiry: 25-09-2025

Date of Initial: 26-09-2022

Issued By

中国认可 国际互认 管理体系 MANAGEMENT SYSTEM CNAS C197-M

The audit of validity of the certificate, the certificate shall be at least once a year. The effectiveness of the Certificate is subject to QR Code in the lower left corner. Meanwhile, you can search the website of certification body: www.qpc.org.cn or search the CNCA website: www.cnca.gov.cn

ZHEJIANG QUANPIN CERTIFICATION CO.,LTD.

Room 603, Floor 6, Building 1, No 74, Puyan Road, Puyan Street, Binjiang District, Hangzhou City, Zhejiang Province, China 310053 WEB: Http://www.qpc.org.cn

ISO14001

ENVIRONMENTAL MANAGEMENT SYSTEM CERTIFICATE

Certificate No.: 20222E20495R0S

We hereby certify that the organization:

LISHUI YIYEN TECHNOLOGY COMPANY LIMITED

Unified social credit code: 91331127MA2E079Y8T

is in conformity with Environmental Management System Standard:

GB/T24001-2016 idt ISO14001:2015

The certificate is valid to the following products/service:

The assembly and related management activities of Voltage Stabilizer、Inverter、Photovoltaic Equipment（MPPT Solar Charger、PCS）、Uninterruptible Power Supply、Emergency Power Supply、Battery Pack Energy Storage System、Battery Management System（BMS）

Registration Address/Audit Address: No.77,Xiang Long Road,Lian Du Zone,Lishui City,Zhejiang Province, China.

Date of Issue: 26-09-2022

Date of Expiry: 25-09-2025

Date of Initial: 26-09-2022

Issued By

中国认可 国际互认 管理体系 MANAGEMENT SYSTEM CNAS C197-M

The audit of validity of the certificate, the certificate shall be at least once a year. The effectiveness of the Certificate is subject to QR Code in the lower left corner. Meanwhile, you can search the website of certification body: www.qpc.org.cn or search the CNCA website: www.cnca.gov.cn

ZHEJIANG QUANPIN CERTIFICATION CO.,LTD.

Room 603, Floor 6, Building 1, No 74, Puyan Road, Puyan Street, Binjiang District, Hangzhou City, Zhejiang Province, China 310053 WEB: Http://www.qpc.org.cn

CERTIFICATION

CERTIFICATION

Certificate of compliance

Low Voltage Directive 2014/35/EU

Certificate No.	BTEK230406006AS
Certificate holder:	LISHUI YIYEN TECHNOLOGY COMPANY LIMITED
Address:	No.77,Xiang Long Road, Lian Du Zone, Lishui City, Zhejiang Province, China
Manufacturer:	Same Certificate holder
Address:	Same Certificate holder
Brand Name:	YIY
Product Designation:	Any-Power Combined Inverter & Charger
Model / Series Models:	APC 1048E, APC 1548E, APC 2048E, APC 3048E, APC 4048E, APC 5048E, APC 6048E
Test Report No(s):	BTEK230406006AS
Test Standard(s):	EN IEC 62368-1: 2020 + A11: 2020

Conclusion:

The submitted products have been tested by us with the listed standards and found in compliance with the following European Directives:

The Low Voltage Directive 2014/35/EU

May 16, 2023 — Date of issue; Certification Mark; Safety Laboratory Manager

ShenZhen BANTEK Testing Co.,Ltd.
A5&A6,Building B1&B2,No.45 Gangbu Road,Bogang Community,
Shiqing Street,Baoan District, Shenzhen Guangdong, China 518104
Tel: +(86)755-2334 4200 E-mail: Service@btek-lab.com Web: www.btek-lab.com

CERTIFICATION

VERIFICATION

Verification of compliance

Electromagnetic compatibility 2014/30/EU

Certificate No.	BTEK230406007AEV
Certificate holder:	LISHUI YIYEN TECHNOLOGY COMPANY LIMITED
Address:	No.77, Xiang Long Road, Lian Du Zone, Lishui City, Zhejiang Province, China
Manufacturer:	Same Certificate holder
Address:	Same Certificate holder
Brand Name:	YIY
Product Designation:	High-Power Combined Inverter & Charger
Model / Series Models:	HP 1012E, HP 1512E, HP 2012E, HP 3012E, HP 4012E, HP 5012E, HP 6012E
Test Report No(s):	BTEK230406007AE
Test Standard(s):	EN 55032:2015+A1:2020, EN 55035:2017+A11:2020, EN 61000-3-3:2013+A2:2021, EN IEC 61000-3-2:2019+A1:2021

Conclusion:

This attestation is issued in accordance with the Directive 2014/30/EU of the European Parliament and of the Council of 16 April 2014 on the harmonisation of the laws of the Member States relating to the making available on the market of radio equipment.

June 17, 2023 — Date of issue; Certification Mark; EMC Laboratory Manager

Shenzhen BANTEK Testing Co.,Ltd.
A5&A6,Building B1&B2,No.45 Gangbu Road,Bogang Community,
Shiqing Street,Baoan District, Shenzhen Guangdong, China 518104
Tel: +(86)755-2334 4200 E-mail: Service@btek-lab.com Web: www.btek-lab.com

CERTIFICATION

VERIFICATION

Verification of compliance

Electromagnetic compatibility 2014/30/EU

Certificate No.	BTEK230406017AEV
Certificate holder:	LISHUI YIYEN TECHNOLOGY COMPANY LIMITED
Address:	No.77, Xiang Long Road, Lian Du Zone, Lishui City, Zhejiang Province, China
Manufacturer:	Same Certificate holder
Address:	Same Certificate holder
Brand Name:	YIY
Product Designation:	High-Power Combined Inverter & Charger
Model / Series Models:	HP 1504E, HP 1804E
Test Report No(s):	BTEK230406017AE
Test Standard(s):	EN 55032:2015+A1:2020, EN 55035:2017+A11:2020, EN 61000-3-3:2013+A2:2021, EN IEC 61000-3-2:2019+A1:2021

Conclusion:

This attestation is issued in accordance with the Directive 2014/30/EU of the European Parliament and of the Council of 16 April 2014 on the harmonisation of the laws of the Member States relating to the making available on the market of radio equipment.

June 17, 2023 — Date of issue; Certification Mark; EMC Laboratory Manager

Shenzhen BANTEK Testing Co.,Ltd.
A5&A6,Building B1&B2,No.45 Gangbu Road,Bogang Community,
Shiqing Street,Baoan District, Shenzhen Guangdong, China 518104
Tel: +(86)755-2334 4200 E-mail: Service@btek-lab.com Web: www.btek-lab.com

CERTIFICATION

CERTIFICATION

Certificate of compliance

Low Voltage Directive 2014/35/EU

Certificate No.	BTEK230406010AS
Certificate holder:	LISHUI YIYEN TECHNOLOGY COMPANY LIMITED
Address:	No.77,Xiang Long Road, Lian Du Zone, Lishui City, Zhejiang Province, China
Manufacturer:	Same Certificate holder
Address:	Same Certificate holder
Brand Name:	YIY
Product Designation:	High-Power Combined Inverter & Charger
Model / Series Models:	HP 1024E, HP 1524E, HP 2024E, HP 3024E, HP 4024E, HP 5024E, HP 6024E
Test Report No(s):	BTEK230406010AS
Test Standard(s):	EN IEC 62368-1: 2020 + A11: 2020

Conclusion:

The submitted products have been tested by us with the listed standards and found in compliance with the following European Directives:

The Low Voltage Directive 2014/35/EU

May 16, 2023 — Date of issue; Certification Mark; Safety Laboratory Manager

ShenZhen BANTEK Testing Co.,Ltd.
A5&A6,Building B1&B2,No.45 Gangbu Road,Bogang Community,
Shiqing Street,Baoan District, Shenzhen Guangdong, China 518104
Tel: +(86)755-2334 4200 E-mail: Service@btek-lab.com Web: www.btek-lab.com

CERTIFICATION

CERTIFICATION

Certificate of compliance

Low Voltage Directive 2014/35/EU

Certificate No.	BTEK230406014AS
Certificate holder:	LISHUI YIYEN TECHNOLOGY COMPANY LIMITED
Address:	No.77,Xiang Long Road, Lian Du Zone, Lishui City, Zhejiang Province, China
Manufacturer:	Same Certificate holder
Address:	Same Certificate holder
Brand Name:	YIY
Product Designation:	High-Power Combined Inverter & Charger
Model / Series Models:	HP 8024E, HP 10024E, HP 12024E
Test Report No(s):	BTEK230406014AS
Test Standard(s):	EN IEC 62368-1: 2020 + A11: 2020

Conclusion:

The submitted products have been tested by us with the listed standards and found in compliance with the following European Directives:

The Low Voltage Directive 2014/35/EU

May 16, 2023 — Date of issue; Certification Mark; Safety Laboratory Manager

ShenZhen BANTEK Testing Co.,Ltd.
A5&A6,Building B1&B2,No.45 Gangbu Road,Bogang Community,
Shiqing Street,Baoan District, Shenzhen Guangdong, China 518104
Tel: +(86)755-2334 4200 E-mail: Service@btek-lab.com Web: www.btek-lab.com

CERTIFICATION

VERIFICATION

Verification of compliance

Electromagnetic compatibility 2014/30/EU

Certificate No.	BTEK230406003AEV
Certificate holder:	LISHUI YIYEN TECHNOLOGY COMPANY LIMITED
Address:	No.77, Xiang Long Road, Lian Du Zone, Lishui City, Zhejiang Province, China
Manufacturer:	Same Certificate holder
Address:	Same Certificate holder
Brand Name:	YIY
Product Designation:	Any-Power Combined Inverter & Charger
Model / Series Models:	APC 1024E, APC 1524E, APC 2024E, APC 3024E, APC 4024E, APC 5024E, APC 6024E
Test Report No(s):	BTEK230406003E
Test Standard(s):	EN 55032:2015+A1:2020, EN 55035:2017+A11:2020, EN 61000-3-3:2013+A1:2019+A2:2021, EN IEC 61000-3-2:2019+A1:2021

Conclusion:

This attestation is issued in accordance with the Directive 2014/30/EU of the European Parliament and of the Council of 16 April 2014 on the harmonisation of the laws of the Member States relating to the making available on the market of radio equipment.

June 17, 2023 — Date of issue; Certification Mark; EMC Laboratory Manager

Shenzhen BANTEK Testing Co.,Ltd.
A5&A6,Building B1&B2,No.45 Gangbu Road,Bogang Community,
Shiqing Street,Baoan District, Shenzhen Guangdong, China 518104
Tel: +(86)755-2334 4200 E-mail: Service@btek-lab.com Web: www.btek-lab.com

DEKRA

ATTESTATION OF CONFORMITY

Issued to:	LISHUI YIYEN TECHNOLOGY CO.,LTD (Lijing National Industrial Park) No. 77 Xiangloing Road, Nanmingshan Street, Liandu District, Lishui City, Zhejiang Province, P.R. China
For the product:	Power Conversion Module
Trade name:	YIY
Type/Model:	UP-M-62.5KW; UP-M-100KW
Ratings:	See model list
Manufactured by:	LISHUI YIYEN TECHNOLOGY CO.,LTD (Lijing National Industrial Park) No.77 Xiangloing Road, Nanmingshan Street, Liandu District, Lishui City, Zhejiang Province, P.R. China
Requirements:	EN IEC 61000-6-2:2019 EN IEC 61000-6-4:2019

This Attestation is granted on account of an examination by DEKRA, the results of which are laid down in a confidential file no. 6174214.51

This Attestation implies that the examined types are in accordance with the standards designated under the Electromagnetic compatibility directive 2014/30/EU.

The examination has been carried out on one single specimen or several specimens of the product, submitted by the manufacturer. The Attestation does not include an assessment of the manufacturer's production. Conformity of his production with the specimen tested by DEKRA is not the responsibility of DEKRA.

The CE marking may be affixed on the product if all relevant and effective EC directives are complied with.

Arnhem, 1 March 2024 — Number: 6174214.02AOC

DEKRA Testing and Certification (Shanghai) Ltd.

Kristy Lin
Certification Manager

© Integral publication of this attestation and adjoining reports is allowed Page 1 of 2

CE

DEKRA Testing and Certification (Shanghai) Ltd.
3F #250 Jiangchangsan Road Shibei Hi-Tech Park 200436 Jingan District, Shanghai, China
T +86 21 6056 7666 F +86 21 6056 7555 www.dekra-product-safety.com

DEKRA

ATTESTATION OF CONFORMITY

Issued to:	LISHUI YIYEN TECHNOLOGY CO.,LTD No. 77 Xiangloing Road, Nanmingshan Street, Liandu District, Lishui City, Zhejiang Province, P.R. China (Lijing National Industrial Park)
For the product:	Power Conversion System
Trade name:	YIY
Type/Model:	UP-M-62.5KW; UP-M-100KW
Ratings:	UP-M-62.5KW: DC: Voltage range: 650-950Vdc; Max Current: 100A, AC: Rated power: 62.5kW, rated voltage: 400Vac, Max. current: 100A, 50/60Hz, 3W+PE, power factor: -1(lagging)- 1(leading) UP-M-100KW: DC: Voltage range: 650-950Vdc; Max Current: 170A, AC: Rated power: 100kW, rated voltage: 400Vac, Max. current: 167A, 50/60Hz, 3W+PE, power factor: -1(lagging)- 1(leading) General: IP20, class I protection, 2000m altitude, -20-50°C
Manufactured by:	LISHUI YIYEN TECHNOLOGY CO.,LTD No. 77 Xiangloing Road, Nanmingshan Street, Liandu District, Lishui City, Zhejiang Province, P.R. China (Lijing National Industrial Park)
Requirements:	EN 62477-1:2012+A1:2017

This Attestation is granted on account of an examination by DEKRA, the results of which are laid down in a confidential file no. 6174215.30.

This Attestation implies that the examined types are in accordance with the standards designated under the Low Voltage Directive (LVD) 2014/35/EU.

The examination has been carried out on one single specimen or several specimens of the product, submitted by the manufacturer. The Attestation does not include an assessment of the manufacturer's production. Conformity of his production with the specimen tested by DEKRA is not the responsibility of DEKRA.

The CE marking may be affixed on the product if all relevant and effective EC directives are complied with.
Arnhem, 28 May 2024 — Number: 6174215.01AOC

DEKRA Testing and Certification (Shanghai) Ltd.

Kristy Lin
Certification Manager

© Integral publication of this attestation and adjoining reports is allowed

CE

DEKRA Testing and Certification (Shanghai) Ltd.
3F #250 Jiangchangsan Road Shibei Hi-Tech Park 200436 Jingan District, Shanghai, China
T +86 21 6056 7666 F +86 21 6056 7555 www.dekra-product-safety.com

DEKRA

CERTIFICATE OF CONFORMITY

Issued to:	LISHUI YIYEN TECHNOLOGY CO., LTD No. 77 Xiangloing Road, Nanmingshan Street, Liandu District, Lishui City, Zhejiang Province, P.R. China (Lijing National Industrial Park)
For the product:	Power Conversion System
Trade name:	YIY
Type/Model:	UP-M-62.5KW; UP-M-100KW
Ratings:	Operating temperature range: - 20°C to + 50°C Protective class: I Ingress protection rating: IP20 Power factor range (adjustable): -1(lagging)-+1(leading) UP-M-62.5KW: DC: Voltage range: 650-950Vdc; Max Current: 100A, AC: Rated power: 62.5kW, rated voltage: 400Vac, Max. current: 100A, 50/60Hz, 3W+PE UP-M-100KW: DC: Voltage range: 650-950Vdc; Max Current: 170A, AC: Rated power: 100kW, rated voltage: 400Vac, Max. current: 167A, 50/60Hz, 3W+PE
Manufactured by:	LISHUI YIYEN TECHNOLOGY CO., LTD No. 77 Xiangloing Road, Nanmingshan Street, Liandu District, Lishui City, Zhejiang Province, P.R. China (Lijing National Industrial Park)
Requirements:	EN 50549-1:2018 (Requirements for type A Generating Units) COMMISSION REGULATION (EU) 2016/631 (NC RfG)

This Test Certificate is granted on account of an examination by DEKRA, the results of which are laid down in a confidential file no. 6174227.30.
The examination has been carried out on one single specimen of the product. The Attestation does not include an assessment of the manufacturer's production. Conformity of his production with the specimen tested by DEKRA is not the responsibility of DEKRA.

This Test Certificate expires at the latest on, 31 May 2029 or expires upon withdrawal of one of the above mentioned standards.

Shanghai, 31 May 2024 — Number: 6174227.01COC

DEKRA Testing and Certification (Shanghai) Ltd.

Cliff Lin
Certification Manager

IAS ACCREDITED Testing and Calibration PCA-161

© Integral publication of this certificate and adjoining reports is allowed

DEKRA Testing and Certification (Shanghai) Ltd.
No.250, Jiangchangsan Road, Jingan District, Shanghai, 200436 People's Republic of China
T +86 21 6056 7600 F +86 21 6056 7555 www.dekra-product-safety.com
ESA-CER-F021 v4.1

CONTENTS

Off Grid Inverter

SMP Series Off Grid Inverter (230V) 08

SMP-H Series Off Grid Hybrid Inverter (230V) 12

SVP Series Off Grid Hybrid Inverter (120V) 15

Low Frequency Inverter Charger

AP Series Low Frequency Inverter Charger 18

HP Series Low Frequency Inverter Charger 21

HP-W Series Low Frequency Inverter Charger 24

TP Series Low Frequency Inverter Charger 27

TPP Series Three Phase Low Frequency Inverter Charger 29

Hybrid Inverter

HES 5-11.4kW HS LV Series Hybrid Inverter 31

HES 5-12kW HS Series Hybrid Inverter 33

PV Microinverter

EON-MI800S-2B Series PV Microinverter 35

NTS

On Grid Inverter

SPI Series On Grid Inverter Single Phase 37

TPI Series On Grid Inverter Three Phase 39

Pure Inverter

OPS Series Pure Inverter 43

Battery Charger

CSB Series Battery Charger 46

LFP Battery Packs

LFP-M Series IP65 LiFePO4 Battery Pack 48

LFP-M Series IP21 LiFePO4 Battery Pack 50

LFP-M-R Series Rack Type LiFePO4 Battery Pack 52

Others

PV Combiner Box 54

MPPT Solar Charge Controller 56

Solar Panel 58

YIY Residential Energy Storage System

YIY residential energy storage system is a highly flexible and customizable solution suitable for a variety of home energy application scenarios. The system includes inverter, LiFePO4 battery pack, photovoltaic distribution box with built-in MPPT, and an intelligent energy management system that can be monitor by APP.

Users can freely configurate devices according to their needs, supporting multiple modes such as backup power supply, off-grid power generation, self-generation and AC-coupled photovoltaic energy storage. The system not only provides stable and efficient power, but also improves energy self-sufficiency and reduces electricity costs. Users can monitor energy use in real time through a simple operation interface to ensure the optimal operation of the system in various environments, meeting the needs of modern families for intelligent, safe and environmentally friendly energy storage.

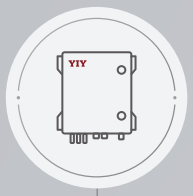

PV Combiner Box

- Built-in MPPT
- Easy installation
- Easy to expand

Back-up Power

Off Grid

Self-Consumption

AC-Coupled

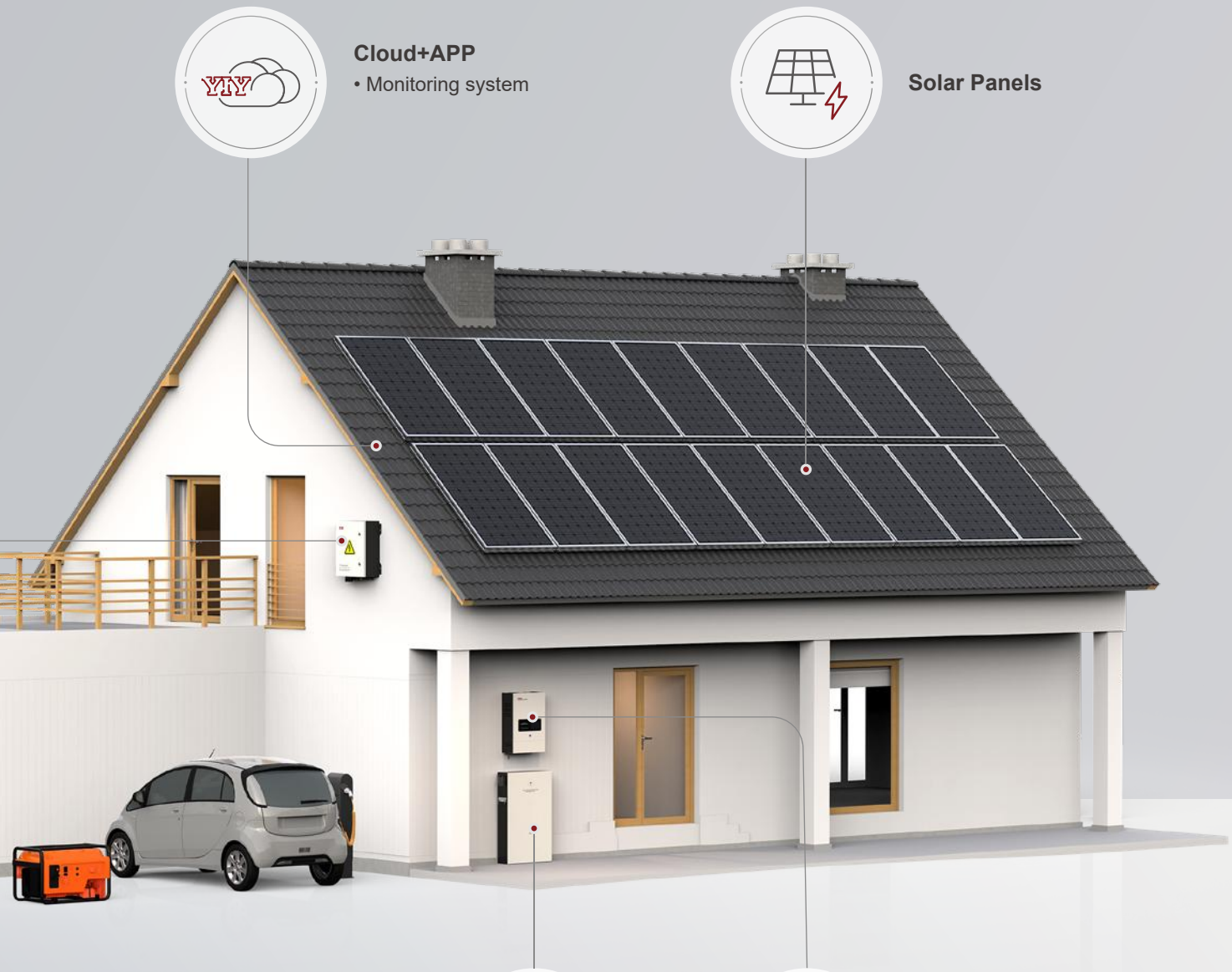

Cloud+APP
- Monitoring system

Solar Panels

Battery
- Modular Design
- Wall-mounted / rack-mounted optional

Inverter
- Off Grid/Hybrid Inverter

What is an complete power system for your vehicles?

• Technology Topology

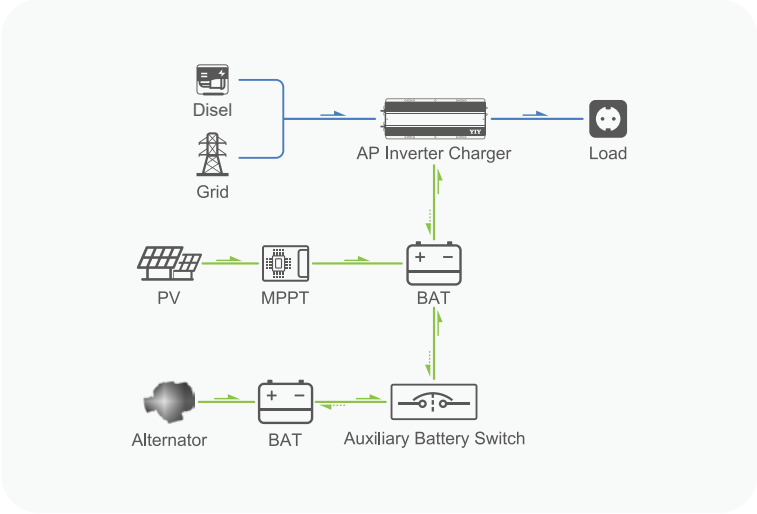

System 1

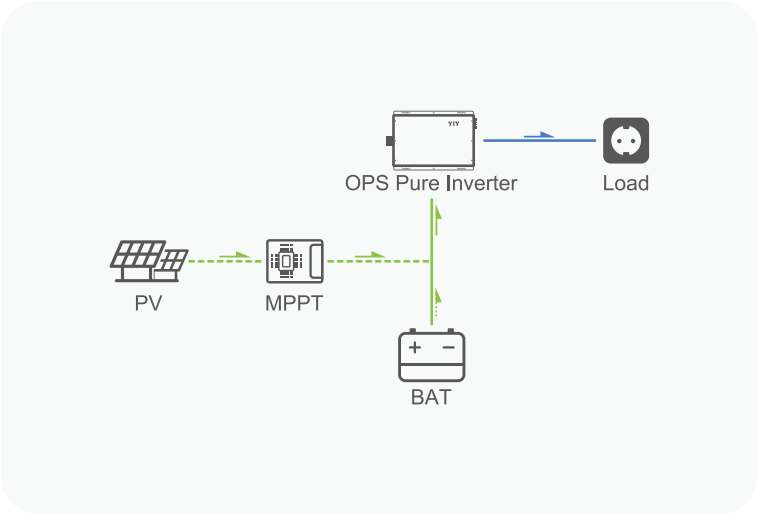

System 2

YIY energy storage system for vehicles is an integrated solution for providing reliable and sustainable power in various vehicle applications, including recreational vehicles (RVs),ambulances,trucks,and buses etc.

This system lever-ages solar energy and advanced energy storage technology to ensure uninterrupted power supply for onboard equipment and appliances.it will include following key components:Pure Sine Wave Inverter,Lithium-ion Battery Packs,Solar Charge Controller,Solar Panels,Monitoring and Control System,etc.

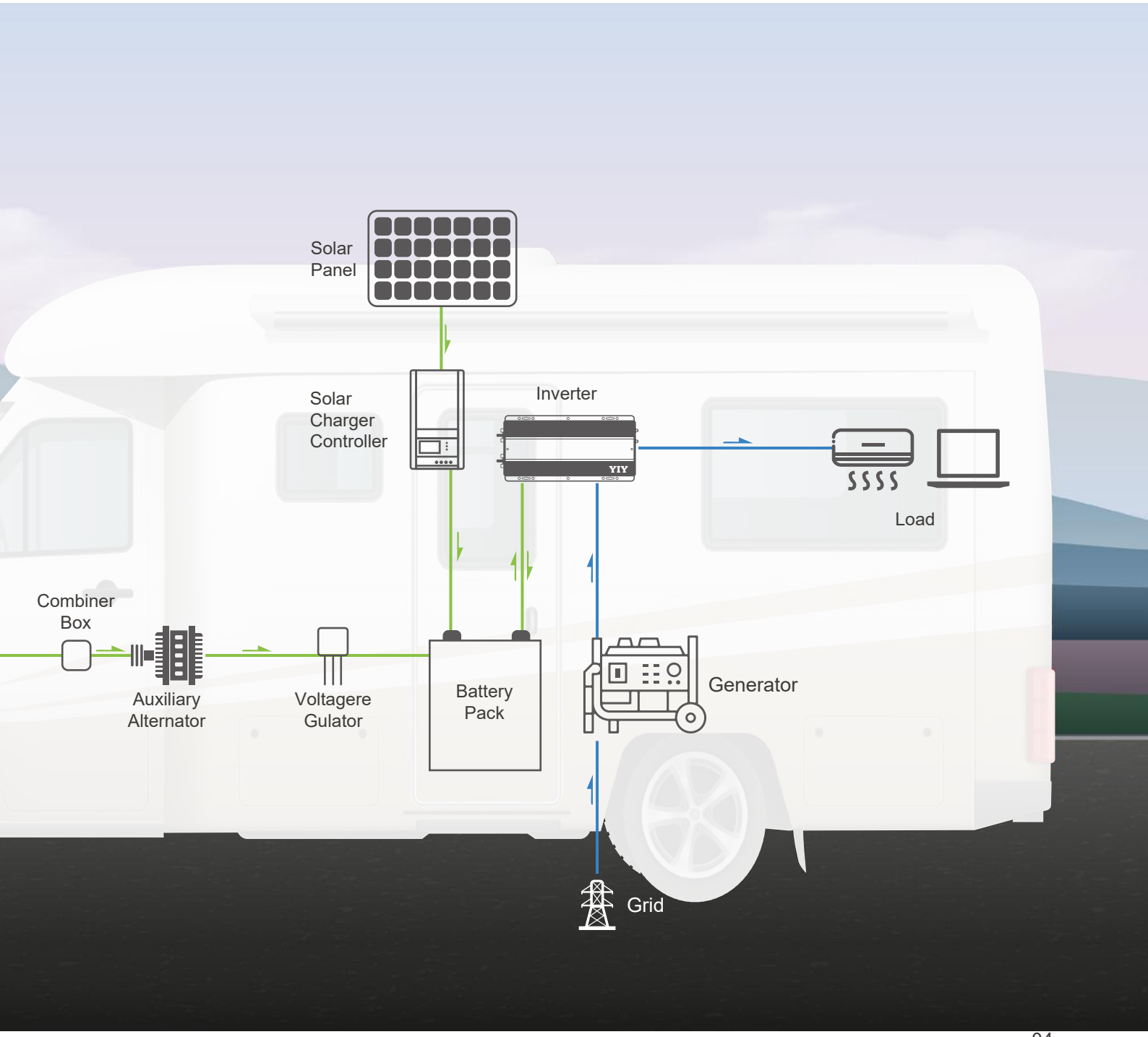

• Technology Topology

Off-Grid System(Backup + PV)

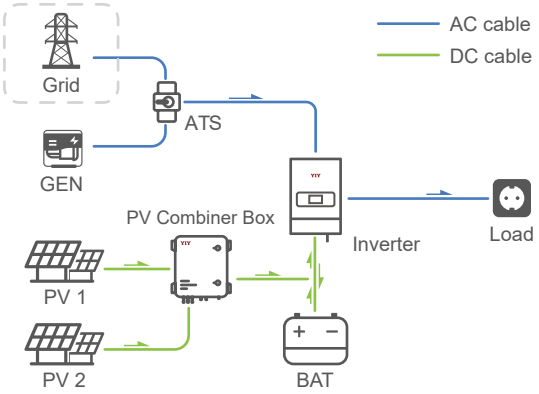

An off-grid home energy storage system is ideal for regions with unstable grids or frequent outages. When grid power is available, solar energy powers the loads first, with any surplus charging the battery (which can also be charged directly by the grid). The grid supplements any shortfall in solar generation. The battery discharges only during a grid outage, ensuring uninterrupted power.The generator automatically starts through inverter only when solar power, grid power, and the battery are all unavailable.

AP Series

HP-W Series

SMP Series

Off-Grid System(Backup)

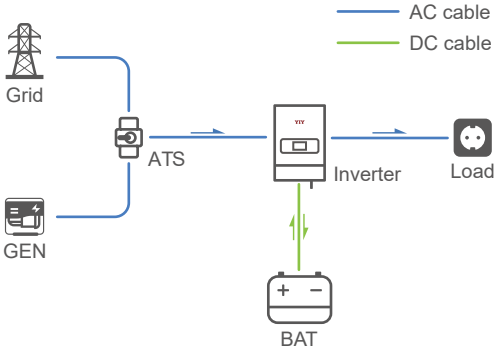

In pure backup mode, the inverter charges the battery from the grid . When a power outage occurs, it automatically switches to battery power. If the battery is depleted before grid power returns, the inverter will start the generator to ensure a continuous supply. The system automatically switches back to grid mode once utility power is restored.

AP Series

HP-W Series

Off-Grid Hybrid System

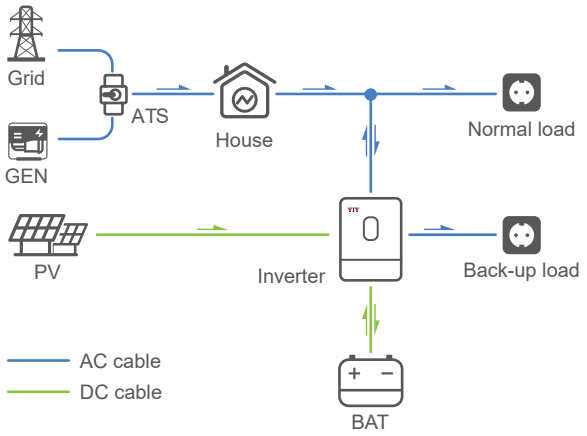

In an off-grid hybrid system, solar power prioritizes supplying the load, with excess energy charging the battery. When solar is insufficient, the battery and grid power supplement the supply to maximize energy utilization. In the event of a grid failure or outage, the system automatically switches to battery mode. If solar, grid, and battery are all unavailable, the inverter automatically starts the generator.

SMP-H Series

SVP Series

On-Grid Hybrid System

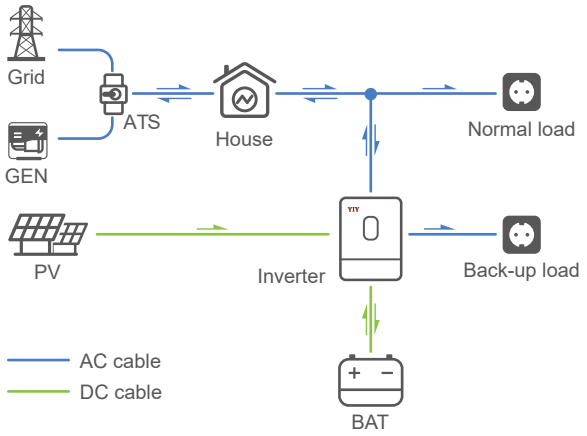

In a grid-tied hybrid system, solar power prioritizes supplying the load, with any excess energy charging the battery. Any further surplus is fed back into the grid. When solar generation is insufficient, the battery and grid power supplement the supply. This enables peak shaving and demand management, alleviates grid congestion in areas with high solar penetration, supports participation in electricity market services such as virtual power plants (VPPs), and provides seamless backup power for scenarios requiring high supply continuity.

HES Series

Grid-Tied System

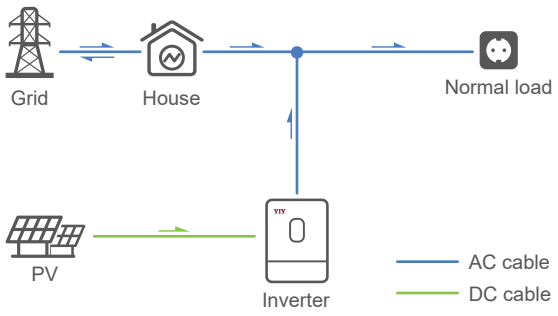

A pure grid-tied solar system (with no battery) directly powers your home with solar energy. Any extra solar power is sent to the grid. When solar isn't enough, power is drawn from the grid. If the grid fails, the system shuts down automatically for safety.

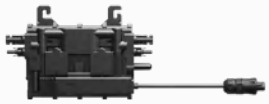

EON-MI800S-2B Series

SPI Series

TPI Series

SMP 1.2kW

Off Grid Inverter

• Features

- Built-in 60A Solar Charger.
- PV Input Voltage Range 20-125V.
- Pure Sine Wave.
- LCD Display.
- Support Lead-acid Battery.
- Power Factor 1.0.
- Detachable Dust Cover.

• System Diagram

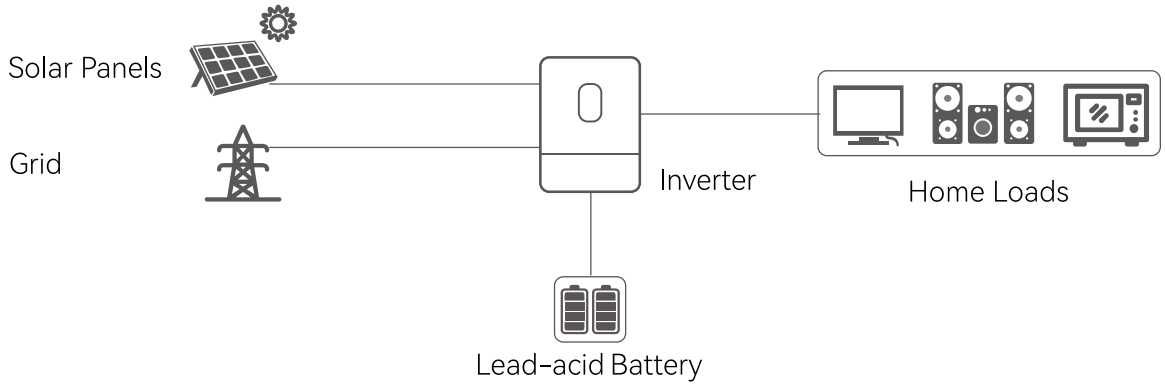

• Technical Parameter

SMP 1.2kW Series Off Grid Inverter	
Model	SMP-1212-10
AC Input	
Rated Input Voltage (Vac)	208/220/230/240;L+N+PE
Voltage Range (Vac)	90~280+3(normal mode);170~280±3 (UPS mode)
Frequency (Hz)	50/60(Auto Adaptive)
AC Output	
Rated Capacity (Kw)	1.2
Surge Power (Kva)	2.4
Voltage (Vac)	208/220/230/240
Power Factor (PF)	1
Frequency	50/60Hz±0.1%
Switch Time (ms)	10 (normal mode) /10 (UPS mode)
Wave Form	Pure Sine Wave
Overload Capacity (Battery Mode)	10min@102%~120%load; 60s@120%~150% load;10s@150%~200%load
Max. Efficiency (Battery Mode)	90%@12Vdc
Parallel Quantity	NA
Charger (PV/AC)	
Solar Charger Type	MPPT
Max PV input current/power	14A/1000W
MPPT Range@Operating Voltage (Vdc)	18~100
Max PV Open Circuit Voltage (Vdc)	125
Max PV Charge Current (A)	60
Max AC Charge Current (A)	60
Max. Charge Current (PV + AC)(A)	120
Battery	
Normal Voltage (Vdc)	12
Floating Charge Voltage (Vdc)	13.8
Overcharge Protection (Vdc)	15
Battery Type	Lead-acid
Interface	
HMI	LCD
Interface	RS485/RS232
Monitoring	NA
General Data	
Ingress Protection	IP21
Operating Temperature	-10 °C~ 50 °C
Relative Humidity	5%~95%(Non-condensing)
Storage Temperature	-15°C~60°C
Net Weight (kg)	3.2
Dimensions(W*H*D)	347*236*91mm
Max. Operating Altitude	4000m(Derating above 1000m)
Activation	
AC Activation	Yes
PV Activation	Yes

SMP 3.6-12kW

Off Grid Inverter

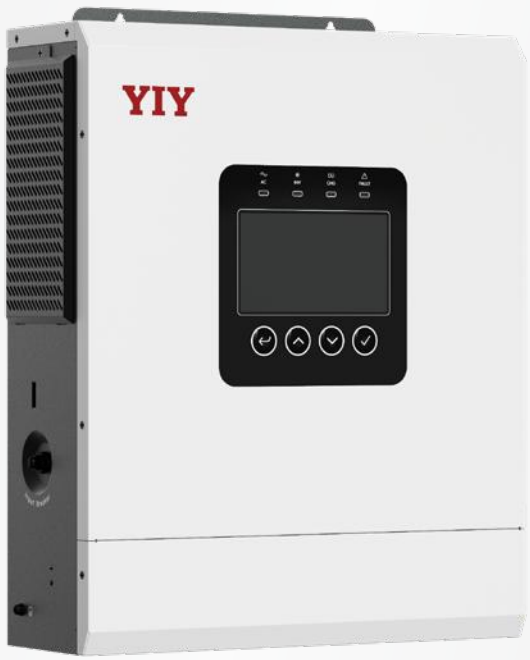

• Features

- Built-in Solar Charger 100A/120A.
- Wide PV Input Voltage Range.
- Workable with Generator.
- Complete CE Certificate.
- Support Lithium/Lead-acid Battery.
- Lithium Battery Activation.
- Detachable Dust Cover.
- WiFi Monitoring(optional).
- With the ability to work without battery.

• System Diagram

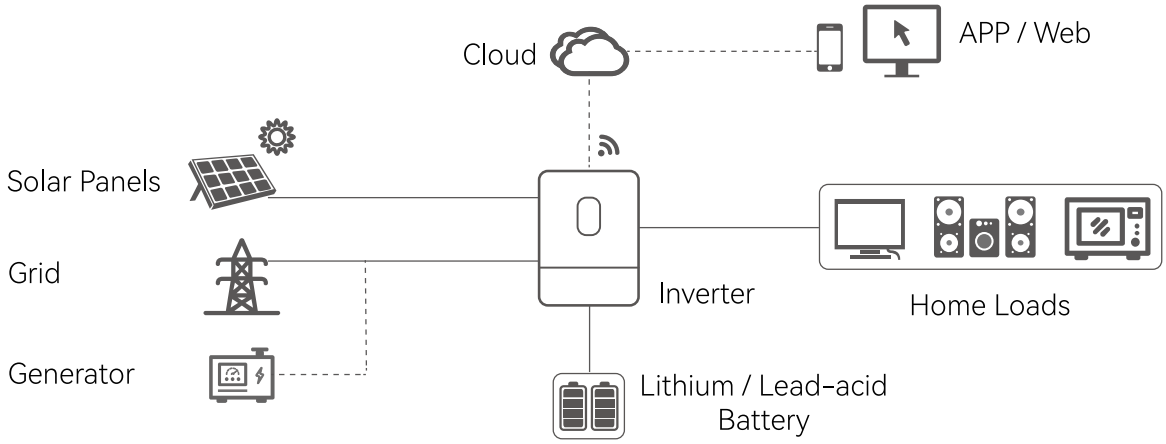

• Technical Parameter

SMP 3.6-12kW Series Off Grid Inverter						
Model	SMP-3624-50	SMP-5024-90	SMP-5048-60	SMP-6548-90	SMP-7248-90	SMP-12048-150
AC Input						
Rated Input Voltage (Vac)	208/220/230/240;L+N+PE					
Voltage Range (Vac)	90~280+3(normal mode);170~280±3 (UPS mode)					
Frequency (Hz)	50/60(Auto Adaptive)					
AC Output						
Rated Capacity (Kw)	3.6	5	5	6.5	7.2	12
Surge Power (Kva)	7.2	10	10	12	13	24
Voltage (Vac)	208/220/230/240					
Power Factor (PF)	1					
Frequency	50/60Hz±0.1%					
Switch Time (ms)	10 (APP/UPS mode) / 20 (GEN mode)	10 (normal mode) /10 (UPS mode)				10(APP/UPS mode), 20(GEN mode)
Wave Form	Pure Sine Wave					
Overload Capacity (Battery Mode)	60s@102%~110% load; 10s@110%~130% load; 3s@130%~150% load; 0.2s@>150% load	1min@102%-120% load;10s@>120% load	60s@102%~110% load; 10s@110%~130% load; 3s@130%~150% load; 0.2s@>150% load	1min@102%~110% load; 10s@ > 110% load	10min@102%-108%Load; 1min@108%-135%Load 10S@135%-180%Load; 5s@>180%Load	1min@102%~125%Load; 10s@>125%Load
Max. Efficiency (Battery Mode)	92.7%@24Vdc	93.5%@24VDC	93%@48VDC	94%@48Vdc	93%@48Vdc	94%@48Vdc
Parallel Quantity	NA		9	9	NA	
Charger (PV/AC)						
Solar Charger Type	MPPT					MPPT*2
Max PV Input Current /Input Power	18A/5000W	27A / 9000W	18A / 6000W	27A/9000W	28A/9000W	Using One MPPT: 27A/9KW Using Two MPPTs: 22.5A/Per MPPT, 15kW/Total
MPPT Range@Operating Voltage (Vdc)	40~450	60~450	120-450	60~450		
Max PV Open Circuit Voltage (Vdc)	500				520	500
Max PV Charge Current (A)	100	160	80	120	120	160
Max AC Charge Current (A)	100	160	80	120	120	160
Max. Charge Current (PV + AC)(A)	100	160	80	120	120	160
Battery						
Rated Voltage (Vdc)	24	24	48			
Floating Charge Voltage (Vdc)	27	27	54			
Overcharge Protection (Vdc)	30.5	30.5	61			
Battery Type	Lithium and Lead-acid					
Interface						
HMI	LCD					
Interface	RS232 / RS485 / CAN		RS485 / CAN / RS232 / Dry Contact	RS232/RS485/CAN/ Parallel Interface	RS232/RS485/CAN/ Dry Contact/CT/Meter	RS232 / RS485 / CAN
Monitoring	WiFi (optional/built-in/external)		WiFi (optional/external)	WiFi (optional/built-in/external)	WiFi (optional/external)	WiFi (optional/built-in/external)
General Data						
Ingress Protection	IP21					
Operating Temperature	-10 °C~ 60 °C					
Relative Humidity	5%~95%(Non-condensing)					
Storage Temperature	-15°C~60°C					
Net Weight (kg)	6.2	8.4	9.5	8.4	10.7	15
Dimensions(W*H*D)	420*284*94	410*336*110	510*306*115	410*336*110	514*338*136.5	495*425*120
Max. Operating Altitude	4000m(Derating above 1000m)					

SMP-H 5.6-12kW

Off Grid Hybrid Inverter

• Features

- Sectional charge/discharge; supports lead-acid & lithium batteries with dual activation.
- Hybrid/grid-connected with anti-backflow; battery-less solar+grid operation.
- Four charging modes plus power-saving mode.
- Dual output (inverter/bypass) for uninterrupted pure sine-wave UPS.
- Full digital SPWM control & dual MPPT (99.9% efficiency).
- 360° protection and intelligent cooling (variable-speed fan, AC switch).

• System Diagram

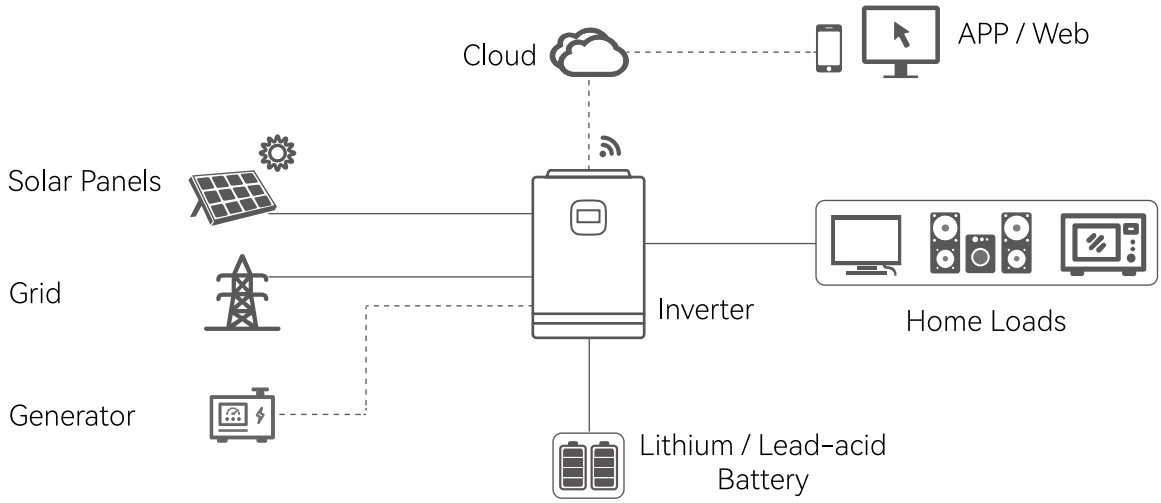

• Technical Parameter

SMP-H 5.6-12kW Series Off Grid Hybrid Inverter					
Models	SMP-H-5648-60P	SMP-H-6248-60P	SMP-H-8048-110P	SMP-H-11048-110P	SMP-H-12048-120P
Parallel mode					
Permitted parallel number	1~6				
AC mode					
Rated input voltage	220/230Vac				
Input voltage range	(170Vac~280Vac)±2% (90Vac-280Vac)±2%				
Frequency	50Hz/60Hz (Auto detection)				
Frequency Range	47±0.3Hz~55±0.3Hz (50Hz); 57±0.3Hz~65±0.3Hz (60Hz);				
Overload/short circuit protection	Circuit breaker				
Efficiency	>95%				
Conversion time (bypass and inverter)	10ms (typical)				
AC reverse protection	Yes				
Maximum bypass overload current	40A		60A		
Inverter mode					
Output voltage waveform	Pure sine wave				
Rated output power (VA)	5600	6200	8000	11000	12000
Rated output power (W)	5600	6200	8000	11000	12000
Power factor	1				
Rated output voltage (Vac)	230Vac				
Output voltage error	±5%				
Output frequency range (Hz)	50Hz±0.3Hz/60Hz±0.3Hz				
Maximum Efficiency	>92%		>93%		
Overload protection	(102% < load <125%) ±10%: report error and turn off the output after 5 minutes; (125% < load < 150%) ± 10%: report error and turn off the output after 10 seconds; Load >150% ±10%: report error and turn off the output after 5 seconds;				
Peak power	11000VA	12000VA	16000VA	22000VA	24000VA
Loaded motor capability	3HP	4HP	5HP	7HP	8HP
Output short circuit protection	Circuit breaker				
Bypass circuit breaker pecification	40A		63A		
Rated battery input voltage	48V (Minimum starting voltage 44V)				
Battery voltage range	40.0Vdc~60Vdc±0.6Vdc (Undervoltage alarm/shutdown voltage/overvoltage alarm /overvoltage recovery... settable on LCD screen)				
Power saving mode self-consumption	Load≤25W		Load≤50W		

AC charging			
Battery type	Lead acid or lithium battery		
Maximum charge current (can be set)	80A	120A	150A
Charge current error	±5Adc		
Charge voltage rang	40~60Vdc		
Short circuit protection	Circuit breaker and blown fuse		
Circuit breaker specifications	40A	63A	
PV charging			
MPPT way	1	2	
Maximum PV open circuit voltage	500Vdc		
PV operating voltage range	120~500Vdc		
MPPT voltage range	90~450Vdc		
Battery voltage range	40~60Vdc		
Maximum PV input power	6000W	5500W+5500W	6000W+6000W
Maximum PV input current	22A	22A+22A	
PV charging current range (can be set)	0~100A	0-150A	
Charging short circuit protection	Blown fuse		
Wiring protection	Reverse polarity protection		
Hybrid charging Max charger current specifications (AC charger+PV charger)			
Max charger current (can be set)	0~100A	0~150A	
Certified specifications			
Certification	CE(IEC62109-1,2)		
EMC certification level	EN61000, C2		
Operating temperature range	-15°C ~ 55°C	-10°C to 55°C,> 45°C drop runs	
Storage temperature range	-25°C ~ 60°C	-25°C ~ 55°C	
Humidity range	5% to 95%(Conformal coating protection)		
Noise	≤60dB		
Heat dissipation	Forced air cooling, variable speed of fan		
Communication interface	USB/RS485(/WiFi/GPRS)/ Dry contact control		
Size (L*W*D)	415mm*280mm*100mm	540mm*350mm*120mm	
Weight (kg)	7.8	19.5	

SVP48 3.6-12kW LV

Off Grid Hybrid Inverter

• Features

- Scheduled sectional charge/discharge; dual-activation for lead-acid & lithium batteries.
- Solar-grid-battery hybrid or battery-less operation with anti-feed-in.
- Four charging modes; dual MPPT (99.9% efficiency).
- Pure sine-wave UPS (split/single-phase, 100–127 VAC) with inverter & bypass.
- Touch LCD flow diagram; CAN/USB/Wi-Fi/ RS-485 & remote/dry-contact control.
- Power-saving mode; variable-speed fan; 360° protection; optional whole-house CT.

• System Diagram

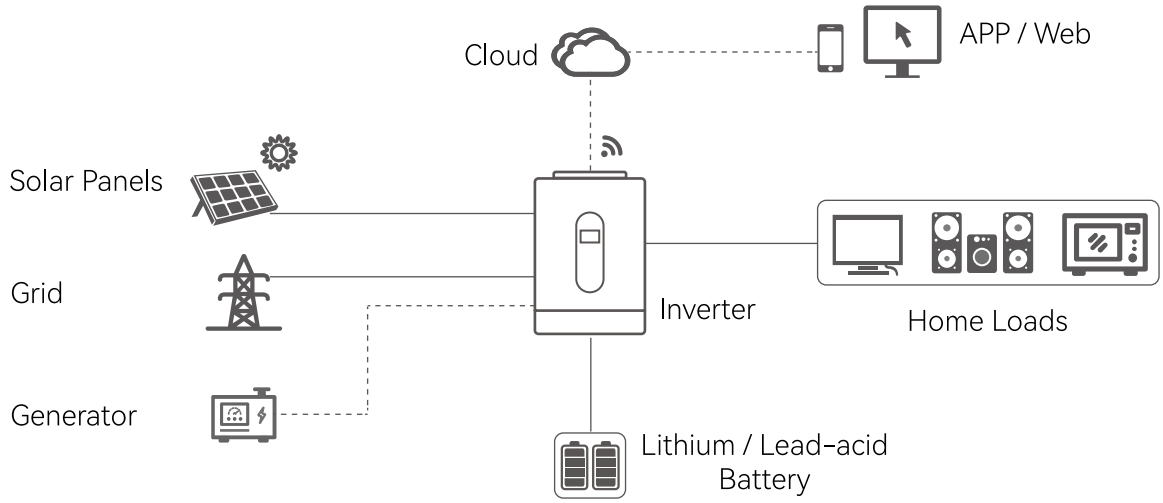

• Technical Parameter

SVP48 3.6-12kW LV Series Off Grid Hybrid Inverter				
Models	SVP4836LV-P	SVP4865LV-P	SVP48100LV-P	SVP48120LV-P
Parallel mode				
Permitted parallel number	1~6			
AC mode				
Rated input voltage	120Vac±5%		120(L1/N, L2/N)/240Vac(L1/L2)	
Input phase voltage range	(90Vac~140Vac)±2%		(85Vac~140Vac)±2%	
Frequency	50Hz/60Hz (Auto detection)			
Frequency Range	47±0.3Hz~55±0.3Hz (50Hz);57±0.3Hz~65±0.3Hz (60Hz);			
Overload/short circuit protection	Circuit breaker			
Efficiency	>95%			
Conversion time (bypass and inverter)	10ms (typical)			
AC reverse protection	Yes			
Maximum bypass phase overload current	40A	60A	2pole, 60A/60A(L1/L2)	
Inverter mode				
Output voltage waveform	Pure sine wave			
Rated output power (VA)	3600	6500	Split phase: 10000	Split phase: 12000
			Single phase: 7200 (limited by the wiring terminals)	
Rated output power (W)	3600	6500	Split phase: 10000	Split phase: 12000
			Single phase: 7200 (limited by the wiring terminals)	
Power factor	1			
Rated output voltage (Vac)	120Vac		120Vac (L1/N, L2/N)/240Vac(L1/L2)	
Output voltage error	±5%			
Output frequency range (Hz)	50Hz±0.3Hz/60Hz±0.3Hz			
Maximum Efficiency	>91%			
Overload protection	(105% < load <110%) ±5%: report error and turn off the output after 5 minutes; (110% < load < 125%) ± 5%: report error and turn off the output after 10 seconds; Load >125% ±5%: report error and turn off the output after 5 seconds;			
Peak power	7200VA	12000VA	Split phase: 15000VA	Split phase: 18000VA
			Single phase: 15000VA	Single phase: 18000VA
Loaded motor capability	2HP	5HP	5HP	6HP
Output short circuit protection	Circuit breaker		Can protect, after continuous short circuit for 1 second	
Bypass circuit breaker phase specification	40A	63A	2pole, 63A/63A(L1/L2)	
Rated battery input voltage	48V (Minimum starting voltage 44V)		51.2V (Minimum starting voltage 44V)	
Battery voltage range	40.0Vdc~60Vdc±0.6Vdc (Undervoltage alarm/shutdown voltage/ overvoltage alarm /overvoltage recovery... settable on LCD screen)		40.0Vdc~58.6Vdc±0.6Vdc (Undervoltage alarm/shutdown voltage/ overvoltage alarm /overvoltage recovery... settable on LCD screen)	
Power saving mode self-consumption	Load≤50W		Load per phase is null or less than 25W enter power-saving mode	

AC charging				
Battery type	Lead acid or lithium battery			
Maximum charge current (can be set)	40A	120A	120A	160A
Charge current error	/		±5Adc	
Charge voltage range	/		40~58.6Vdc	
Short circuit protection	/		Circuit breaker and blown fuse	
Circuit breaker phase specifications	/		2pole, 60A/60A(L1/L2)	
PV charging				
Number of MPPT groups	/		2	
Maximum PV open circuit voltage	300Vdc		500Vdc	
PV operating voltage range	120~300Vdc		90Vdc~500Vdc	
MPPT voltage range	90~260Vdc		80Vdc~450Vdc	
Battery voltage range	40~60Vdc		40-58.6Vdc	
Maximum PV input power	4500W	4500W+4500W	5500W+5500W	6000W+6000W
Maximum PV input current	27A	22A+22A	22A+22A	
PV charge current(can be set)	0~80A	0~150A	200A	220A
Charging short circuit protection	Blown fuse			
Wiring protection	Reverse polarity protection			
Hybrid charging Max charger current specifications (AC charger+PV charger)				
Max charger current (can be set)	0~80A	0~150A	0-200A	0-220A
Certified specifications				
Certification	CE(IEC62109-1,2)/ UL 1741		UL1741	
EMC certification level	EN61000, C2/FCC 15 class B		FCC part15, CLASS B	
Operating temperature range	-10°C to 55°C(>45°C derating)			
Storage temperature range	-25°C ~ 60°C			
Humidity range	5% to 95%(Conformal coating protection)			
Noise	≤60dB			
Heat dissipation	Forced air cooling, variable speed of fan			
Communication interface	USB/RS485(/WiFi/GPRS)/ Dry contact control			
Size (L*W*D)	415*280*100mm	540*350*120mm	620*450*132mm	
Weight (kg)	7.8	18.5	23.8	

AP

Low Frequency Inverter Charger

• Features

- From 600W up to 6KW.
- 230Vac single phase, 120Vac single phase, or 230Vac split phase optional.
- 12V/24V/48V optional.
- AGS, BTS ports compatible.
- Built-in voltage stabilisation (optional).
- Built-in solar controller MPPT (optional).

• Product Dimensions

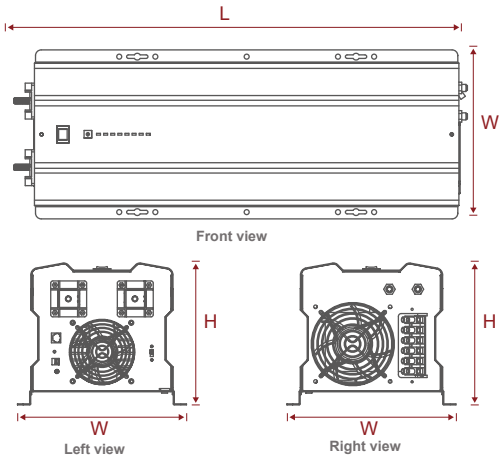

Model	Size(L*W*H)(mm)
AP 600W	325*173*135
AP 1KW~1.5KW	382*218*179
AP 2KW~3KW	442*218*179
AP 4KW~6KW	598*218*179

• Technical Parameter

AP Series Low Frequency Inverter Charger									
Inverter Output	Model	600W	1000W	1500W	2000W	3000W	4000W	5000W	6000W
	Continuous Output Power	600W	1000W	1500W	2000W	3000W	4000W	5000W	6000W
	Surge Rating (20S)	1800W	3000W	4500W	6000W	9000W	12000W	15000W	18000W
	Capable Of Starting Electric Motor	0.6HP	1HP	1.5HP	2HP	3HP	4HP	5HP	6HP
	Output Waveform	Pure Sine Wave / Same As Input (Bypass Mode)							
	Nominal Efficiency	88% (Peak)							
	Line Mode Efficiency	>95%							
	Power Factor	0.9~1.0							
	Nominal Output Voltage rms	100-110-120Vac / 220-230-240Vac							
	Output Voltage Regulation	±10% RMS							
	Output Frequency	50Hz ± 0.3Hz / 60Hz ± 0.3Hz							
	Short Circuit Protection	Yes, current limit function (Fault after 1 sec)							
	Typical Transfer Time	10ms (Max)							
	THD	<10%							
DC Input	Nominal Input Voltage	12.0Vdc							
		(*2 for 24Vdc, *4 for 48Vdc)							
	Min. Start Voltage	10.0Vdc							
	Low Battery Alarm	10.5Vdc/11.0Vdc							
	Low Battery Trip	10.0Vdc/10.5Vdc							
	High Voltage Alarm & Fault	16.0Vdc							
	High DC Input Recovery	15.5Vdc							
	Low Battery Voltage Recover	13.0Vdc							
	Idle Consumption-Search Mode	<25W when power saver on							
Charger	Input Voltage Range	Wide: 90~135Vac / 164~243Vac							
		Narraw: 100~135Vac / 194~243Vac							
	Output Voltage	Depends on battery type							
	Charger Breaker Rating	7A	10A	10A	10A	20A	20A	30A	30A
	Max. Charge Rate	20A±5A	35A/70~90A Max. (Charger current control)						
	Over Charge Protection Shutdown	15.7V for 12Vdc (*2 for 24Vdc, *4 for 48Vdc)							
	Charger Curve(4 stage constant current) 4 Step Digital Controlled Progressive Charge	Battery types (*2 for 24Vdc, *4 for 48Vdc)							
	Switch Setting	Description			Fast Mode /VDC		Float Mode/DC		
	0	Charger Off							
	1	Gel USA			14.0		13.7		
	2	AGM 1			14.1		13.4		
	3	Lithium			13.8		13.6		
	4	Sealed Leac Acid			14.4		13.6		
	5	Gel EURO			14.4		13.8		
	6	Open Lead Acid			14.8		13.8		
	7	LifePO4			14.0		13.8		
	8	De-sulphation			15.5 (4 Hours then off)				
	9	Classic LFP			13.6		13.5		
	Remote Control	Yes(Optional)							

AP Series Low Frequency Inverter Charger									
Bypass& Protection	Input Voltage Waveform	Sine wave (Grid or Generator)							
	Nominal Voltage	120Vac					230Vac		
	Low Voltage Trip	80V/90V±4%					184V/154V±4%		
	Low Voltage Re Engage	90V/100V±4%					194V/164V±4%		
	High Voltage Trip	140V±4%					253V±4%		
	High Voltage Re Engage	135V±4%					243V±4%		
	Max Input AC Voltage	150Vac					270Vac		
	Nominal Input Frequency	50Hz or 60Hz (Auto Detection)							
	Low Frequency Trip	47±0.3Hz for 50Hz, 57±0.3Hz for 60Hz							
	Low Frequency Re Engage	48±0.3Hz for 50Hz, 58±0.3Hz for 60Hz							
	High Frequency Trip	55±0.3Hz for 50Hz, 65±0.3Hz for 60Hz							
	High Frequency Re Engage	54±0.3Hz for 50Hz. 64±0.3Hz for 60Hz							
	Output Short Circuit Protection	Circuit breaker							
	Bypass Breaker Rating	7A	10A	15A	20A	30A	30A	40A	40A
	Transfer Switch Rating	30Amp for UL&TUV					40Amp for UL		
		Max. Bypass Current					40Amp		
Mechanical Specification	Mounting	Wall Mount							
	Inverter Dimensions(L*W*H)	325*173* 135mm	382*218*179mm		442*218*179mm		598*218*179mm		
	Inverter Weight	7.5KG	16KG	17KG	20KG	24KG	35KG	45KG	45KG
	Shipping Dimensions(L*W*H)	425*230* 205mm	520*315*300mm		580*315*300mm		740*315*300mm		
	Shipping Weight	8.5KG	18KG	19KG	22KG	26KG	37KG	47KG	47KG
	Display	Status LED / Status LED+LCD							

AP-mini Series
600-1500W

AP Series
1-6KW

APP Series
1-6KW

HP

Low Frequency Inverter Charger

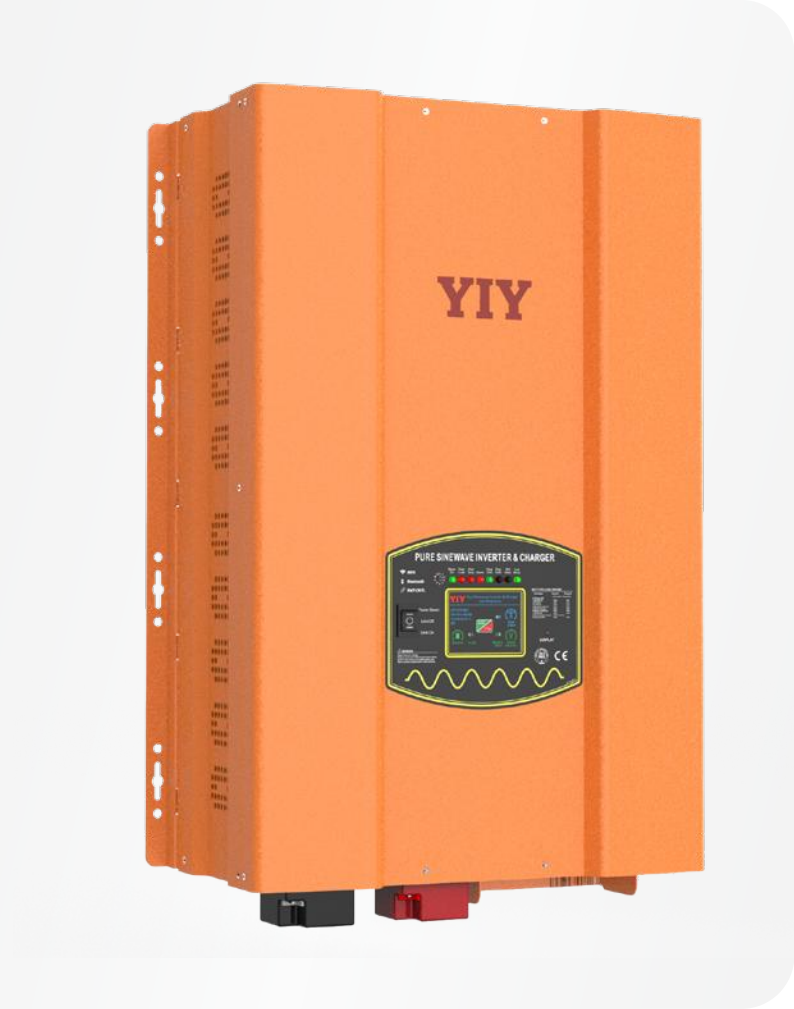

• Features

- High output capacity up to 20KW.
- Ultra low THD, typically 7% under full linear load (battery low).
- Battery temperature sensing for increased charging Precision.
- Powerful charge rate up to 140Amp, selectable From 0%-100%.
- Auto Gen Start function for off grid system with generator as backup power.
- MPPT solar charger controller available.

• Product Dimensions

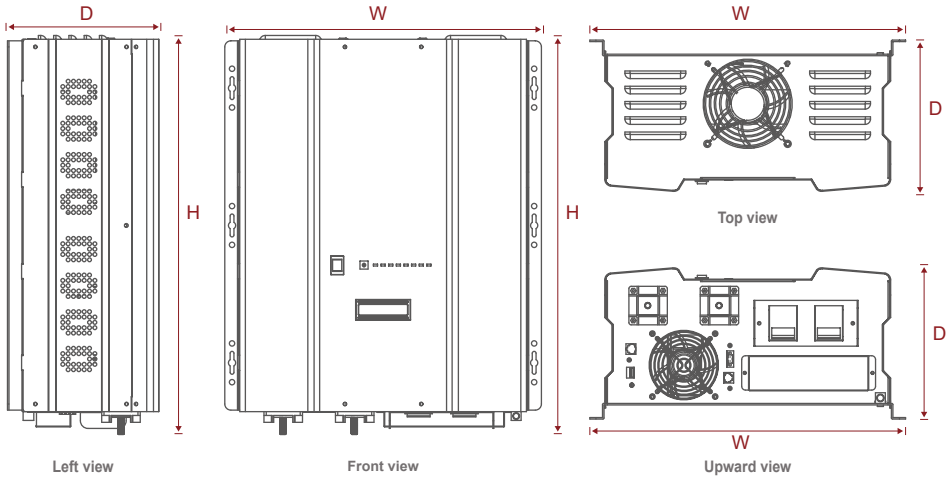

Model	Size(H*W*D)(mm)
HP 1KW~3KW	388*415*200
HP 4KW~6KW	488*415*200
HP 8KW~12KW	588*415*200
HP 15KW~20KW	706*415*213

• Technical Parameter

HP Series Low Frequency Inverter Charger														
Inverter Output	Model	1.0KW	1.5KW	2.0KW	3.0KW	4.0KW	5.0KW	6.0KW	8.0KW	10.0KW	12.0KW	15.0KW	18.0KW	20.0KW
	Continuous Output Power	1.0KW	1.5KW	2.0KW	3.0KW	4.0KW	5.0KW	6.0KW	8.0KW	10.0KW	12.0KW	15.0KW	18.0KW	20.0KW
	Surge Rating (20Secs)	3.0KW	4.5KW	6.0KW	9.0KW	12.0KW	15.0KW	18.0KW	24.0KW	30.0KW	36.0KW	45.0KW	54.0KW	60.0KW
	Output Waveform	Pure Sine Wave/Same As Input (Bypass Mode)												
	Nominal Efficiency	>88% (Peak)												
	Line Mode Efficiency	>95%												
	Power Factor	0.9~1.0												
	Nominal Output Voltage rms	100-110-120Vac / 220-230-240Vac												
	Output Voltage Regulation	±10%RMS												
	Output Frequency	50Hz±0.3Hz / 60Hz±0.3Hz												
	Short Circuit Protection	Yes (1 sec after fault)												
	Typical Transfer Time	10ms (Max)												
	THD	< 3% (Rated battery level, rated full linear load)												
DC Input	Nominal Input Voltage	12.0Vdc/24.0Vdc		12.0Vdc/24.0Vdc/48.0Vdc				24.0Vdc/48.0Vdc	24.0Vdc/48.0Vdc/96.0Vdc		48.0Vdc/96.0Vdc			
	Min. Start Voltage	10.0Vdc / 10.5Vdc for 12Vdc Mode						*2 for 24Vdc / *4 for 48Vdc / *8 for 96Vdc,						
	Low Battery Alarm	10.5Vdc / 11.0Vdc for 12Vdc Mode												
	Low Batteiy Trip	10.0Vdc / 10.5Vdc for 12Vdc Mode												
	High Voltage Alarm	16.0Vdc for 12Vdc Mode												
	Low Battery Voltage Recover	15.5Vdc for 12Vdc Mode												
	Idle Consumption-Search Mode	< 25W when power saver on (Refer to table)												
Charger	Output Voltage	Depends on battery type (Refer to Table 2.5.2)												
	Charger Breaker Rating	20A	20A	20A	25A	32A	40A	40A	50A	80A	80A	100A		
	Max. Charge Power Rate	1/3 Rating Pover (Refer to Table 2.5.3)												
	Battery Initial Voltage For Start	10-15.7Vdc for 12Vdc Mode						*2 for 24Vdc / 4 for 48Vdc / 8 for 96Vdc						
	Over Charge Protection S.D.	15.7Vdc for 12Vdc Mode												
	Selector	Switch Setting			Description			Fast Mode / VDC			Float Mode/VDC			
		0			Charger Off									
		1			Gel USA			14.0			13.7			
		2			AGM 1			14.1			13.4			
		3			Lithium			13.8			13.6			
		4			Sealed Lead Acid			14.4			13.6			
		5			Gel EURO			14.4			13.8			
		6			Open Lead Acid			14.8			13.8			
		7			LifePO4			14.0			13.8			
		8			De-sulphation			15.5 (4 Hours then off)						
		9			Classic LFP			13.6			13.5			
		For 12Vdc Mode Series(*2 for 24Vdc Mode/*4 for 48Vdc Mode/*8 for 96Vdc Mode)												

HP Series Low Frequency Inverter Charger														
BTS	Battery Temperature Sensor (Optional)	Yes (Refer to the table) Variances in Charging Voltage & S.D Voltage Base on the Battery Temperature												
Bypass & Protection	Input Voltage Waveform	Sine Wave (Grid or Generator)												
	Nominal Voltage	100-110-120Vac / 220-230-240Vac												
	Max. Input AC Voltage	150Vac for 120Vac LV Mode; 300Vac for 230Vac HV Mode												
	Nominal Input Frequency	50Hz or 60Hz												
	Low Frequency Trip	47±0.3Hz for 50Hz,57±0.3Hz for 60Hz												
	High Frequency Trip	55±0.3Hz for 50Hz,65±0.3Hz for 60Hz												
	Overload Protection (SMPS Load)	Circuit Breaker												
	Output Short Circuit Protection	Circuit Breaker												
	By Pass Breaker Rating	20A	20A	20A	25A	32A	40A	40A	50A	80A	80A	100A		
	Transfer Switch Rating	30Amp for UL&TUV				40Amp for UL			80Amp for UL			100Amp for UL		
	Bypass Without Battery Connected	Yes (Optional)												
	Max. Bypass Current	30Amp				40Amp			80Amp			100Amp		
Mechanical Specifications	Mounting	Wall Mount												
	Inverter Dimensions (H*W*D)	388*415*200mm				488*415*200mm			588*415*200mm			706*415*213mm		
	Inverter Weight (Solar Charger) KG	21+2.5	22+2.5	23+2.5	27+2.5	38+2.5	48+2.5	49+2.5	60+2.5	66+2.5	70+2.5	85+2.5	95+2.5	100+2.5
	Shipping Dimensions(H*W*D)	550*520*310mm				650*520*310mm			750*520*310mm			850*520*350mm		
	Shipping Weight (Solar Charger) KG	23+2.5	24+2.5	25+2.5	29+2.5	40+2.5	50+2.5	51+2.5	62+2.5	68+2.5	72+2.5	87+2.5	97+2.5	102+2.5
	Display	Status LED / Status LED+LCD												
	Standard Warranty	1 Year												

HP-W

Low Frequency Inverter Charger

• Features

- Built-in EMS, achieves high efficient utilization of power energy between the grid and battery.
- IP20 protection.
- Ultra low THD, typically 7% under full linear load (battery low).
- Battery temperature sensing for increased charging precision.
- Powerful charge rate up to 120 Amp, selectable from 0%-100%.
- Auto Gen Start function for off grid system with generator as backup power.
- PF1.0, high efficiency, lower consumption.
- MPPT solar charger controller available.

• Product Dimensions

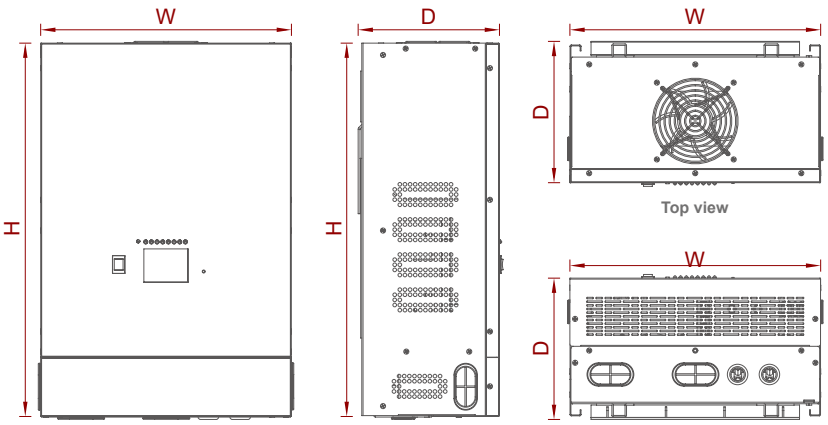

Front view Side view Bottom view

Model	Size(W*D*H)(mm)
HP-W 3-6KW	345*190*515
HP-W 8-12KW	403*190*709
HP-W 15-18KW	652.4*226*502
HP-W 20KW	718.4*246*550

• Technical Parameter (120V)

HP-W Series Low Frequency Inverter Charger							
Model	3KW	6KW	8KW	12KW	15KW	18KW	20KW
Inverter Output							
Continuous Output Power	3KW	6KW	8KW	12KW	15KW	18KW	20KW
Surge Rating (20Secs)	9KW	18KW	24KW	36KW	45KW	54KW	60KW
Output Waveform	Pure Sine Wave/Same As Input (Bypass Mode)						
Nominal Efficiency	>88% (Peak)						
Line Mode Efficiency	>95%						
Power Factor	0.9~1.0						
Nominal Output Voltage rms	L-N:100-110-120Vac		HOT1 OR HOT2-N:120Vac;HOT1-HOT2:240Vac				
Output Voltage Regulation	±2%RMS (INVERTER Mode);-20%~+10%RMS (Bypass Mode)						
Output Frequency	60Hz±0.1Hz(INVERTER Mode);40~70Hz (Bypass Mode)						
Short Circuit Protection	Yes (1 sec after fault)						
Typical Transfer Time	6~8ms 10ms (Max)						
THD	< 3% R Load						
DC Input							
Nominal Input Voltage	12.0Vdc/24.0Vdc /48.0Vdc	24.0Vdc/48.0Vdc		48.0Vdc			
Min. Start Voltage	10.0Vdc/10.5Vdc for 12Vdc Mode	*2 for 24Vdc / *4 for 48Vdc					
Low Battery Alarm	10.5Vdc/11.0Vdc for 12Vdc Mode						
Low Battery Trip	10.0Vdc/10.5Vdc for 12Vdc Mode						
High Voltage Alarm	16.0Vdc for 12Vdc Mode						
Low Battery Voltage Recover	15.5Vdc for 12Vdc Mode						
Idle Consumption-Search Mode	< 25W when power saver on (Refer to table)						
Charger							
Output Voltage	Charger Off	/					
	Gel USA	14/28/56			13.7/27.4/54.8		
	AGM 1	14.1/28.2/56.4			13.4/26.8/53.6		
	Lithium	13.8/27.6/55.2			13.6/27.2/54.4		
	Sealed lead acid	14.4/28.8/57.6			13.6/27.2/54.4		
	Gel EURO	14.4/28.8/57.6			13.8/27.6/55.255.2		
	Open lead acid	14.8/29.6/59.2			13.8/27.6/55.2		
	LifePO4	14/28/56			13.8/27.6/55.2		
	De sulphation	15.5/31/62 (4 Hours then Off)					
	Class LFP	13.6/27.2/54.4			13.5/27/54		
Charger Breaker Rating	25A	40A	50A	80A	100A		
Max. Charge Power Rate	1/3 Rating Power						
Battery Initial Voltage For Start	10-15.7Vdc for 12Vdc Mode	*2 for 24Vdc / 4 for 48Vdc					
Over Charge Protection S.D.	15.7Vdc for 12Vdc Mode						

• Technical Parameter (120V)

HP-W Series Low Frequency Inverter Charger							
Model	3KW	6KW	8KW	12KW	15KW	18KW	20KW
MPPT(Optional)							
PV Input Voltage (Vdc)	13Vdc- 100Vdc				/		
charging current	20A*4 MAX For 48Vdc 50A *4 For 12/24Vdc		20A*6 MAX For 48Vdc 50A *6 For 12/24Vdc				
PV wiring method	2S4P MAX		2S6P MAX				
Input Overvoltage Protection (Vdc)	101Vdc						
Overvoltage recovery voltage	95Vdc						
Overvoltage recovery voltage	10 Vdc						
Undervoltage recovery voltage	12.5Vdc						
Output Voltage (Vdc)	14.25/28.5/57.0Vdc(Optional)						
Conversion Efficiency (%)	95.60%						
Output Overvoltage Protection (Vdc)	15/30/60Vdc						
Communication	RS485						
BTS							
Battery Temperature Sensor(Optional)	Yes(Refer to the table) Variances in Charging Voltage & S.D Voltage Base on the Battery Temperature.						
Bypass & Protection							
Input Voltage Waveform	Sine wave (Grid or Generator)						
Nominal Voltage	L-N:100-110-120Vac		HOT1-HOT2:240Vac				
Max Input AC Voltage	150VAC MAX		300VAC MAX				
Nominal Input Frequency	60Hz						
Low Freq Trip	57±0.1Hz for 60Hz/40±0.1Hz (Wide range)						
High Freq Trip	65±0.1Hz for 60Hz/70±0.1Hz (Wide range)						
Overload protection (SMPS load)	Circuit Breaker						
Output Short circuit protection	Circuit Breaker						
Bypass breaker rating	25A	40A	50A	80A	100A		
Transfer switch rating	30Amp for UL&TUV	40Amp for UL	80Amp for UL		100Amp for UL		
Bypass without battery connected	Yes (Optional)						
Max bypass current	30Amp	40Amp	80Amp		100Amp		
Mechanical Specifications							
Mounting	Wall Mount						
Inverter Dimensions (W*D*H)(mm)	345*190*515		403*190*709		652.4*226*502		718.4*246*550
Shipping Dimensions (W*D*H)(mm)	458*265*623		530*368*839		779*398*628		845*418*676
Display	Status LEDs / Status LEDs+LCD						
Standard Warranty	1 Year						

• Technical Parameter (230V)

HP-W Series Low Frequency Inverter Charger							
Model	3KW	6KW	8KW	12KW	15KW	18KW	20KW
Inverter Output							
Continuous Output Power	3KW	6KW	8KW	12KW	15KW	18KW	20KW
Surge Rating (20Secs)	9KW	18KW	24KW	36KW	45KW	54KW	60KW
Output Waveform	Pure Sine Wave/Same As Input (Bypass Mode)						
Nominal Efficiency	>88% (Peak)						
Line Mode Efficiency	>95%						
Power Factor	0.9~1.0						
Nominal Output Voltage rms	220/230Vac						
Output Voltage Regulation	±2%RMS (INVERTER Mode);-20%~+10%RMS (Bypass Mode)						
Output Frequency	50Hz±0.1Hz(INVERTER Mode);40~70Hz (Bypass Mode)						
Short Circuit Protection	Yes (1 sec after fault)						
Typical Transfer Time	6~8ms 10ms (Max)						
THD	< 3% R Load						
DC Input							
Nominal Input Voltage	12.0Vdc/24.0Vdc /48.0Vdc	24.0Vdc/48.0Vdc		48.0Vdc			
Min. Start Voltage	10.0Vdc/10.5Vdc for 12Vdc Mode	*2 for 24Vdc / *4 for 48Vdc					
Low Battery Alarm	10.5Vdc/11.0Vdc for 12Vdc Mode						
Low Battery Trip	10.0Vdc/10.5Vdc for 12Vdc Mode						
High Voltage Alarm	16.0Vdc for 12Vdc Mode						
Low Battery Voltage Recover	15.5Vdc for 12Vdc Mode						
Idle Consumption-Search Mode	< 25W when power saver on (Refer to table)						
Charger							
Output Voltage	Charger Off	/					
	Gel USA	14/28/56			13.7/27.4/54.8		
	AGM 1	14.1/28.2/56.4			13.4/26.8/53.6		
	Lithium	13.8/27.6/55.2			13.6/27.2/54.4		
	Sealed lead acid	14.4/28.8/57.6			13.6/27.2/54.4		
	Gel EURO	14.4/28.8/57.6			13.8/27.6/55.255.2		
	Open lead acid	14.8/29.6/59.2			13.8/27.6/55.2		
	LifePO4	14/28/56			13.8/27.6/55.2		
	De sulphation	15.5/31/62 (4 Hours then Off)					
	Class LFP	13.6/27.2/54.4			13.5/27/54		
Charger Breaker Rating	25A	40A	50A	80A	100A		
Max. Charge Power Rate	1/3 Rating Power						
Battery Initial Voltage For Start	10-15.7Vdc for 12Vdc Mode	*2 for 24Vdc / 4 for 48Vdc					
Over Charge Protection S.D.	15.7Vdc for 12Vdc Mode						

• Technical Parameter (230V)

HP-W Series Low Frequency Inverter Charger							
Model	3KW	6KW	8KW	12KW	15KW	18KW	20KW
MPPT(Optional)							
PV Input Voltage (Vdc)	13Vdc- 100Vdc						
charging current	20A*4 MAX For 48Vdc 50A *4 For 12/24Vdc		20A*6 MAX For 48Vdc 50A *6 For 12/24Vdc				
PV wiring method	2S4P MAX		2S6P MAX				
Input Overvoltage Protection (Vdc)	101Vdc						
Overvoltage recovery voltage	95Vdc						
Overvoltage recovery voltage	10 Vdc						
Undervoltage recovery voltage	12.5Vdc						
Output Voltage (Vdc)	14.25/28.5/57.0Vdc(Optional)						
Conversion Efficiency (%)	95.60%						
Output Overvoltage Protection (Vdc)	15/30/60Vdc						
Communication	RS485						
BTS							
Battery Temperature Sensor(Optional)	Yes(Refer to the table) Variances in Charging Voltage & S.D Voltage Base on the Battery Temperature						
Bypass & Protection							
Input Voltage Waveform	Sine wave (Grid or Generator)						
Nominal Voltage	220/230Vac						
Max Input AC Voltage	300VAC MAX						
Nominal Input Frequency	50Hz						
Low Freq Trip	47±0.1Hz for 50Hz/40±0.1Hz (Wide range)						
High Freq Trip	55±0.1Hz for 50Hz/70±0.1Hz (Wide range)						
Overload protection (SMPS load)	Circuit Breaker						
Output Short circuit protection	Circuit Breaker						
Bypass breaker rating	25A	40A	50A	80A	100A		
Transfer switch rating	30Amp for UL&TUV	40Amp for UL	80Amp for UL		100Amp for UL		
Bypass without battery connected	Yes (Optional)						
Max bypass current	30Amp	40Amp	80Amp		100Amp		
Mechanical Specifications							
Mounting	Wall Mount						
Inverter Dimensions (W*D*H)(mm)	345*190*515		403*190*709		652.4*226*502		718.4*246*550
Shipping Dimensions (W*D*H)(mm)	458*265*623		530*368*839		779*398*628		845*418*676
Display	Status LEDs / Status LEDs+LCD						
Standard Warranty	1 Year						

TP

Low Frequency Inverter Charger

• Features

- 3K/6K: 120V single phase 60Hz.
- 3K/6K/12K: 230V single phase 50Hz.
- Built-in EMS.
- MODBUS/RS485/CAN communication.
- 60A~240A AC charging current.
- Grid-battery hybrid power supply.
- IP54.
- Max. efficiency: 92%.

• Product Dimensions

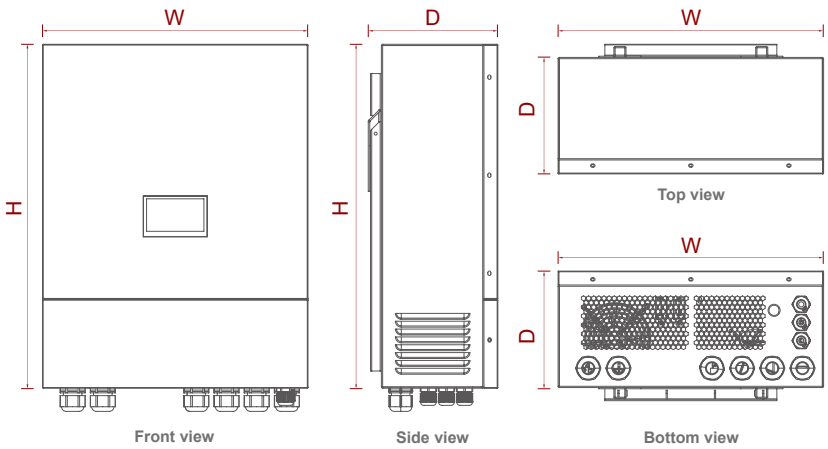

Model	Size(W*D*H)(mm)
TP 3-6KW	440*195*570
TP 12KW	605*220*750

• Technical Parameter

TP Series Low Frequency Inverter Charger						
Model		3048	3048E	6048	6048E	12048E
Parameter Configuration						
Inverter Mode	Battery Rated Voltage	48V				
	Battery Voltage Range	40-58V				
	Rated Output Power	3000W	3000W	6000W	6000W	12000W
	Inverter Mode Efficiency	92%(Peak)				
	Rated Output Voltage	120Vac	230Vac	120Vac	230Vac	230Vac
	Rated Output Frequency	50/60Hz				
	Overload Capacity	(110%<load<125%) ±10%: Protection in 15 minutes; (125%<load<150%) ±10%: Post-60s protection; (load>150%) ±10%: Post-20s protection.				
Mains Mode	Charging Voltage Range	52-59Vdc				
	Max. Charging Current	60A	60A	120A	120A	240A
	Utility Input Voltage	120Vac	230Vac	120Vac	230Vac	230Vac
	Input Voltage Range	80/90~140Vac, 140/184~254Vac				
	AC Rated Frequency	50/60Hz				
	Frequency Range	47~55, 57~65/40~70Hz				
System Parameter						
System Parameter	Cooling Method	Forced air cooling				
	Noise Level	≤75dB				
	Temperature Range	-20°C ~ 40°C				
	Protection Level	IP54				
	Humidity Range	0~95%(Non-condensing)				
	Dimensions(W*D*H)	440*195*570mm				605*220*750mm
Other						
Other	Max. Efficiency	92%				
	Wiring Method	Single phase				
	Isolation Type	Built-in transformer isolation				
	Protection Functions	AC Over/Under Voltage, Over-Temperature, Frequency Anomaly, Over-Current, Fan Fault, Battery Over/Under Voltage, Battery Over-Temperature				
	Display	LCD+APP				
	Communication Interface	RS485(MPPT), CAN(BAT)				
	Communication Settings	Adjustable parameters can be configured via the LCD screen, PC-based software, or mobile APP				
	Hybrid Power Supply	In utility mode, the battery can supply 95% of the load's energy demand				

TPP

Three Phase Low Frequency Inverter Charger

Wall-mounted:6-18KW

Cabinet type:24-45KW

• Features

- High output capcity upto 45KW.
- Unbalance Load Acceptable Idle Consumption Search Mode,less than 100 W when Power Saver On.
- Powerful charge rate max charge current up to 450A (150A*3).
- Intelligent commnication port RS 232,RS 485,CAN port.
- Advanced MPPT solar charger controller Available.
- Remote control optional(LED or LCD remote).
- Connection mode:3-phase 4-wire/3-phase 3-wire.
- DC Voltage:48VDC.
- Remote Control Seletable(RJ11 port/RJ45 port).
- Ultra Low THD, less than 3% under full linear load (battery low).
- 13Vdc battery Recover Point,Dedicated for Renewable Energy Systems.
- BTS Seletable.

• Product Dimensions

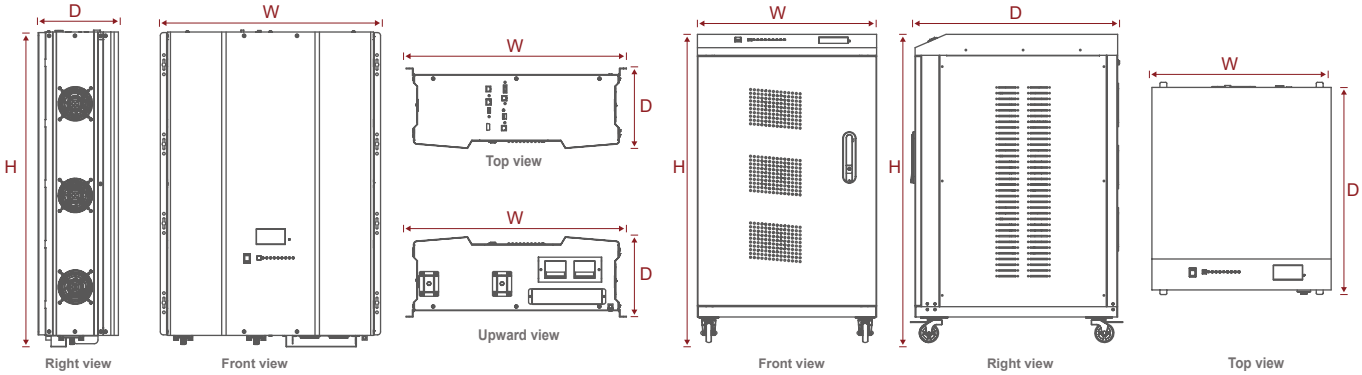

Model	TPP 6~18KW (Wall-mounted)	TPP 24~36KW(Cabinet type)	TPP 45KW(Cabinet type)
Size(W*D*H)(mm)	583*213*803	513*650*835	513*768*880

• Technical Parameter

TPP Series Three Phase Low Frequency Inverter Charger										
Inverter Output	Model	6KW	9KW	12KW	15KW	18KW	24KW	30KW	36KW	45KW
	Continuous Output Power	6000W	9000W	12000W	15000W	18000W	24000W	30000W	36000W	45000W
	Surge Rating(20s)	18000W	27000W	36000W	45000W	54000W	72000W	90000W	108000W	135000W
	Capable of Starting Electric Motor	6HP	9HP	12HP	15HP	18HP	24HP	30HP	36HP	45HP
	Unbalance Load Acceptable	100%								
	DC Input Voltage	48.0Vdc								
	Output Waveform	Pure Sine wave/Same as input (Bypass mode)								
	Nominal Efficiency	89% (Peak)								
	Line Mode Efficiency	>95%								
	Power Factor	0.9~1.0								
	Connection mode	3-phase 4-wire system+Gnd								
	Output voltage rating	3AC/N 400V/207V								
	Output phase voltage	120/230VAC					230VAC			
	Output Voltage Regulation	±10% RMS								
	Output Frequency	50/60HZ ± 0.3Hz								
	Short Circuit Protection	Yes, Current Limit Function (Fault after 60ms)								
	Typical transfer Time	Typical 6~8ms,10ms (Max)								
	THD	<3%Linear Load								
DC Input	Nominal Input Voltage	48.0Vdc								
	Minimum Start Voltage	42.0Vdc / 44.0Vdc								
	Low Battery Alarm	42.0Vdc / 44.0Vdc								
	Low Battery Trip	40.0Vdc / 42.0Vdc								
	High Voltage Alarm & Fault	64.0Vdc								
	High DC Input Recovery	62.0Vdc								
	Low Battery Voltage Recover	52.0Vdc								
	Idle Consumption-Search Mode	< 100W when Power Saver On								
Charge	Input Voltage Range	Narrow: 96~132VAC / 184~253VAC;Wide:70~135VAC / 140~270VAC								
	Input Frequency Range	Narrow: 47~55±0.3Hz for 50Hz,57~65±0.3Hz for 60Hz Wide: 40~70±0.3Hz for 50Hz/60Hz								
	Output Voltage	Same as input								
	Charger Breaker Rating(230Vac)	10A	20A	20A	30A	30A	40A	50A	60A	80A
	Charger Breaker Rating(120Vac)	20A	30A	40A	50A	60A				

HES 5-11.4kW HS LV

Split Phase Hybrid Inverter

• Features

- Up to 11.4kW output intergrated 200A transfer Relay, support whole home backup power.
- IP65 protection, support indoor and outdoor installlation.
- Lithium battery and lead acid battery compatibility.
- Maximum 4 MPPTs.
- With UPS function switch time ≤ 20ms.
- Compatibility with generator input for backups.

• System Diagram

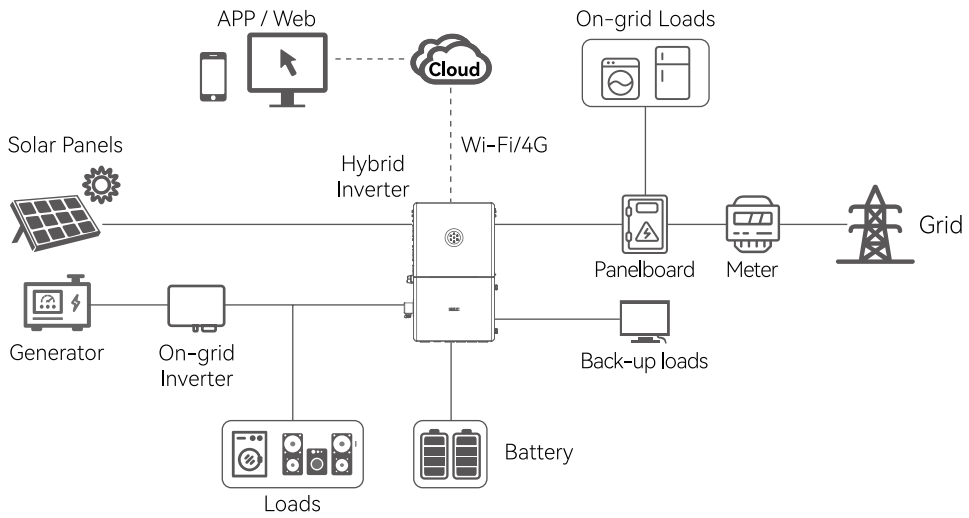

• Technical Parameter

Model	HES-5K-HS LV	HES-7.6K-HS LV	HES-9.6K-HS LV	HES-11.4K-HS LV
PV String Input				
Max PV Array Power [Wp]@STC	7500	11400	14400	17100
Max. DC Voltage [V]	600			
MPPT Voltage Range [V]	90~550			
Nominal DC Voltage [V]	380			
Start Voltage/Min Input Voltage [V]	100			
Max.DC Input Current [A]	16/16/16		16/16/16/16	
No. of Strings per MPPT	1/1/1		1/1/1/1	
No. of MPPT	3		4	
Battery Input				
Battery Type	Lead-acid or LiFePO4			
Battery Voltage Range[V]	40~60			
Max.Charging/Discharging Current [A]	160		240	
AC Output [On-grid]				
Rated AC Power [W]@208Vac	4330	6580	8320	9880
Rated AC Power [W]@240Vac	5000	7600	9600	11400
Max. Apparnet Power [VA]	5500	3860	10560	12540
Rated AC Current [A]@208Vac	20.8	31.7	40	47.5
Max. AC Current [A]@240Vac	22.9	34.8	44	52.3
Rated AC Voltage/Range	L1/L2/N/PE，208V/240V；183V~229V/211V~264V			
Rated Output Frequency [Hz]	60/54~65			
Power Factor [cosφ]	0.8 leading~0.8 lagging			
Total Harmonic Distortion [THDi]	<3%			
AC Output [Back-up Mode]				
Rated Output Power [W]@240Vac	5000	7600	9600	11400
Over Load Capacity [W, 10s]	11400		17100	
Rated Output Voltage [V]	120/240			
Rated Output Frequency [Hz]	60			
Output THDV(@ Liner Load)	<3%			
Efficency				
Max. Efficiency	97.6%			
CEC Efficiency [@600Vdc]	97%			
Bat-AC Max. Efficiency	93%			
Protection				
Over Voltage Protection	Intergrated			
AC Surge Protection	Type II			
DC Surge Protection	Type II			
Over Heat Protection	Intergrated			
Islanding Pretection	Intergrated			
AFP	Intergrated			
RSD	Intergrated			
Interface				
Display	LED+APP (Bluetooth)			
Communication Por	RS232 +RS485(RJ45)+DRM(RJ45)			
Communication	Wi-Fi/Ethernet/4G			
Load Monitor	24 hours			
General Data				
Isolation Type	HF			
Standby Power Consumption [W]	<10			
Operating Temperature Range	-40°C +60°C (>45°C power derating)			
Cooling Method	Smart Fan Cooling			
Ambient Humidity	0%~100% no-condensing			
Altitude	4000m(>3000m power derating)			
Noise [dBA]	<40			
Ingress Protection	NEMA 4x (IP65)			
Mounting	Wall Mounting			
Dimensions [H*W*D][inch]	30.7*18.5*10.2			
Weight [kg]	50 (110 lbs)			
Warranty [years]	10			
Safety/EMC Standard	UL 1741 CRD, IEEE 1547, UL 1699B, UL 1998, UL 9540, CAN/CSA C22.2.107.1-1, FCC, Part 15 Class B, SRD-UL1741			

HES 5-12kW HS

Hybrid Inverter

• Features

- Colorful touch LCD, IP65 protection degree.
- Max. 20A PV input current; DC/AC access oversizing up to 200%.
- Max 240A fast charge/discharge current.
- Heat-resistant (>50°C with derating).
- Support whole home backup function with up to 63 A bypass.
- Max. 4 pcs parallel for on-grid and off-grid operation, Support multiple batteries parallel.
- Integrated Intelligent energy management with generator, heat pump,solar system and smart load.
- Ultralight for easy installation and space-saving.

• System Diagram

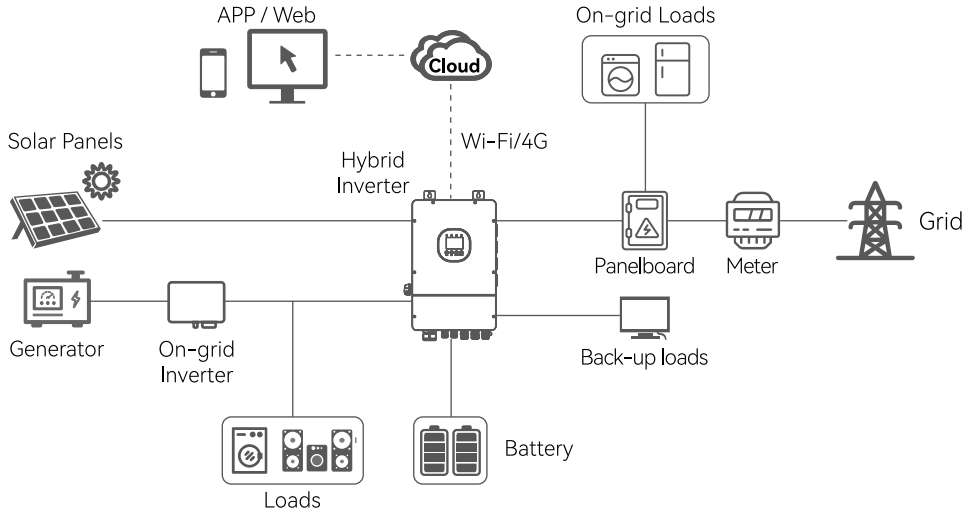

• Technical Parameter

Model	HES-5K-HS	HES-6K-HS	HES-7.6K-HS	HES-8K-HS	HES-10K-HS	HES-12K-HS
DC Input						
Max. PV Access Power [Wp]@STC	10000	12000	15200	16000	20000	24000
Max PV Input Power[W]	8000	9600	12200	12800	16000	19200
Max. DC Voltage [V]	500					
MPPT Voltage Range [V]	90~480					
Rated DC Voltage [V]	360					
Start Voltage [V]	80					
Max.DC Input Current [A]	20/20		40/40			
Max.DC Short Circuit Current [A]	25/25		50/50			
No. of MPPT	2					
Battery Parameters						
Battery Type	Lead-acid or LiFePO4					
Battery Voltage Range[V]	40~60					
Max.Charging/Discharging Current [A]	100	120	190		240	
AC Output [On-grid]						
Rated AC Power [W]	5000	6000	7600	8000	10000	12000
Max.Apparent Power [VA]	5500	6600	8360	8800	10000	12000
Rated Output Current [A]@230Vac	21.8	30	33	34.8	43.5	52.2
Max. Output Current [A]	25	30	38	40	45.5	54.6
Rated AC Voltage/Range [V]	L+N+PE, 220,230,240/180~280					
Rated Output Frequency/Range [Hz]	50,60/45~55,55~65					
Power Factor [cos φ]	0.8 leading~0.8 lagging					
Total Harmonic Distortion [THDi]	<3%					
AC Input [On-grid]						
Rated AC Voltage/Range [V]	L+N+PE, 220,230,240/180~280					
Rated Input Frequency [Hz]	50,60					
Bypass Current [A]@230Vac	63					
AC Output [Back-up]						
Max.Output Power [VA]	5000	6000	7600	8000	10000	12000
Max. Output Current [A]	25	30	38	40	45.5	54.6
Peak Output Apparent Power [VA]	2 Times,10S					
Rated AC Voltage/Range [V]	L+N+PE, 220,230,240/180~280					
Rated Output Frequency/Range [Hz]	50,60/45~55,55~65					
Output THDv (@ Linear Load)	<3%					
Efficiency						
Max. Efficiency	97.6%					
Euro Efficiency	97.0%					
Protection						
Battery Input Reverse Polarity Protection	Integrated					
Over load Protection	Integrated					
AC Short Circuit Current Protection	Integrated					
DC Surge Protection/AC Surge Protection	Integrated					
Anti-islanding Protection	Integrated					
AFCI Protection/RSD Protection	Optional					
Interface						
PV Connection	MC4					
AC Connection	Terminal Block					
Battery Connection	Terminal Block					
Display	LCD+LED+APP					
Communication	Wi-Fi/Ethernet/4G(Optional)					
General Parameters						
Topology	Non-isolated					
Operating Temperature Range	-40°C to +60°C (50°C to 60°C with derating)					
Cooling Method	Intelligent Fan cooling					
Ambient Humidity	0-100% Non-condensing					
Altitude	4000m (>3000m Power Derating)					
Noise [dBA]	<50					
Ingress Protection	IP65					
Dimensions [H*W*D] [mm]	590*380*241					
Weight [kg]	29.0					
Warranty [Year]	5/10					
Standard	EN 62109-1/2, EN 61000-6-1/2/3/4, IEC 62116, IEC 61727, IEC62183, PEA&MEA, NBR 16149, NBR 16150, PORTARIA Nº 140,515, NRS097					

EON-MI800S-2B

PV Microinverter

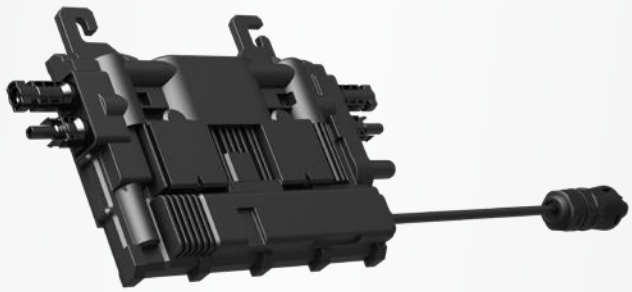

• Features

- More compact, lighter, ultra-high power density.
- Mass products comply with EU EMI standards.
- Safer with rapid shutdown compliance.
- Plug & play, enabling faster, safer and flexible installation.
- High reliability with longer standard warranty.
- 2-in-1 design with 2 independent MPPTs and monitoring.

• System Diagram

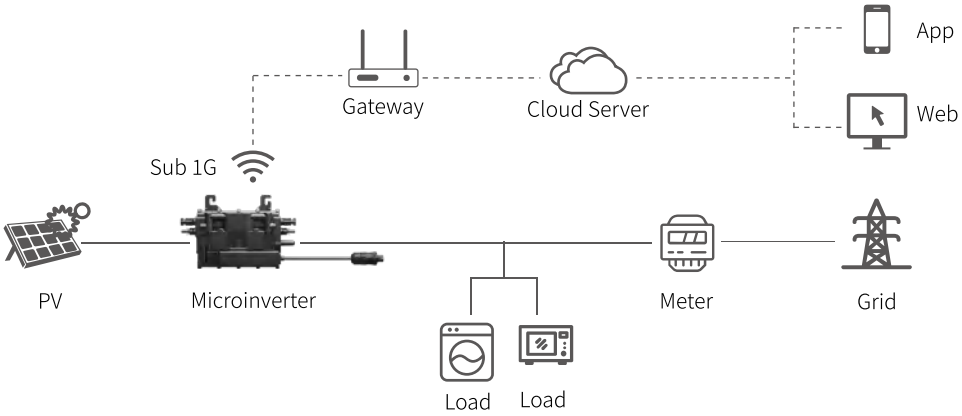

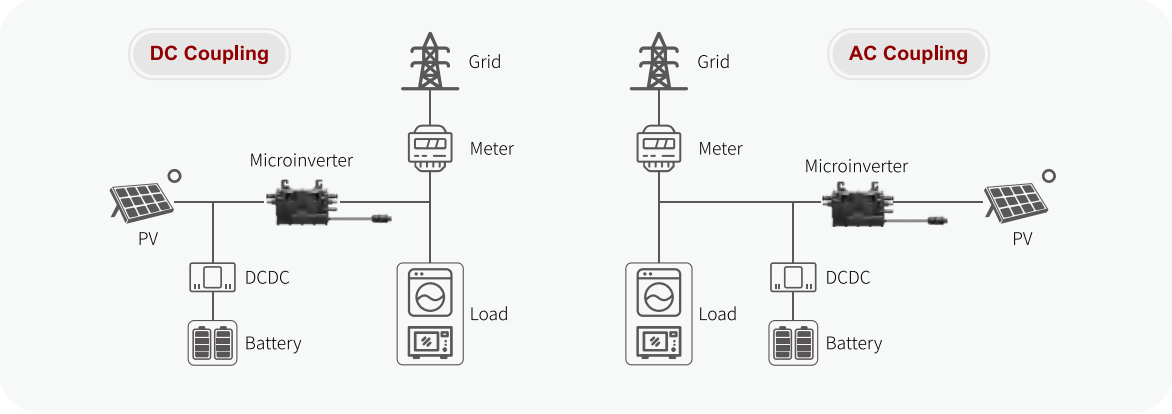

• Technical Parameter

EON-MI800S-2B Series PV Microinverter	
Product Model	**EON-MI800S-2B**
Input Data (DC)	
Commonly used module power	320~590W
Maximum input voltage	Min.16, Typ.42, Max.60V
Start-up voltage	Min.18, Typ.19, Max.20V
MPPT voltage range	Min.16, Typ.42, Max.60V
Maximum input current	2 x 16A
Maximum input short circuit current	2 x 22A
Number of input	2
Number of MPPT	2
Output Data (AC)	
Rated output power	800VA
Output current range	0~3.48A
Output voltage	Min.183V, Typ. 230V, Max. 264V
AC frequency range	47.5~51.5Hz
Total harmonic distortion	Typ. < 3%, Max. < 5%
Power factor (adjustable)	> 0.99 default 0.9 leading…0.9 lagging
Efficiency	
Peak efficiency	96.5%
MPPT efficiency	99.8%
Night Consumption	<50mW
Environmental and Mechanical Characteristics	
Operation temperature	-40 to +65℃
Ingress protection	IP67
Cooling	Natural convection
Nominal Dimensions	228*150*31.3mm
Nominal weight	2.4kg
Features	
Communication	Sub-1G
Compliance	IEC/EN 62109-1/-2, EN 50549, VDE-AR-N 4105-2018 UTE C15-712-1:2013 / VFR 2019/ DIN VDE 0126-1-1:2013-08 CEI 0-21:2022-03
Electromagnetic compatibility	IEC/EN 61000-3-2/-3, IEC/EN 61000-6-1/-2/-3/-4

SPI Series

On Grid Inverter Single Phase

- Monitor system performance in real-time via smartphone app or web portal using out advanced monitoring platform.
- Quick and easy single person installation Fault codes warning view on LCD display Built-in limiter optional.
- Comply with international quality standards tested by TUV,BV,Dekra etc.
- IP65 ingress protection10+years R&D accumulation and support.

• Product Features

- Big LCD display
- Power export limit
- Wifi/GPRS/Lan communication optional
- Compact and easy to install

• Technical Parameter

Model No	SPI1000TL	SPI1500TL	SPI2200TL	SPI3000TL	SPI3600TL	SPI4400TL	SPI5000TL	SPI6000TL
DC Side / Input Parameters								
AC Input								
Max DC power (W)	1500	2250	3300	4500	5400	6600	7500	7500
Max DC voltage (Vdc)	550							
Min System start/Shut down voltage (Vdc)	65/70	75/100						
MPPT voltage range(Vdc)	70~500	100~500						
Max. input current (A)	18A					22A		
Max.input short circuit per MPPT	25A					30A		
Number of MPP trackers	1							
Strings per MPP tracker	1							
AC Side / Output Parameters								
Nominal output power (W)	1000	1500	2200	3000	3600	4000	5000	6000
Maximum output power (W)	1100	1650	2420	3300	3960	4400	5500	6600
Nominal output voltage/range (V)	208,220,230,240/180~270							
AC grid frequency/range (Hz)	50Hz,60Hz(auto-selection) / 44Hz-55Hz; 54Hz~65Hz							
Maximum output current (A)	6	8	12	16	16	21	25	26
AC connection (with PE)	Single phase							
Current distortion(THDi)	<1.5%				<2.5%			
Power factor	~1%(Adjustable from 0.8 leading to 0.8 lagging)							
Efficiency								
Maximum conversion efficiency	97.30%	97.30%	97.40%	97.50%	97.80%	97.80%	97.50%	97.60%
European efficiency	97.00%	97.00%	97.10%	97.20%	97.30%	97.30%	97.20%	97.30%
MPPT efficiency	99.90%							
Safety and Protection								
DC reverse-polarity protection	yes							
Anti-islanding / Overvoltage protection	yes							
Short circuit protection	yes							
Leakage curent protection	yes							
Grid monitoring / Ground fault monitoring	yes							
DC/AC side SPD(thermally protected)	yes							
General Parameters								
Dimension (L*W*H)(mm)	370*274*104				370*318.5*105.5			
Weight (kg)	7				8			
Embedded DC Switch	Optional							
Night power consumption (w)	< 0.2							
Isolation type	Transformerless							
Protection degree	IP65 according to IEC60529							
Operation temperature (°C)	-25 ~ +60							
Cooling concept	Smart Cooling							
Operating Altitude (m)	<2000m without power derating							
Acoustic noise level (dB)	< 25							
Display	Graphic LCD							
Communication Interface	Standard WiFi; RS485 (optional)							
Wranty	Standard 5 years; 7/10 years optional							
Certificates and Approvals								
CE-(EMC/LVD) : EN(IEC) 61000-1/-2/-3/; EN(IEC) 62109-1/-2								

TPI Series

On Grid Inverter Three Phase

- Monitor system performance in real-time via smartphone app or web portal using out advanced monitoring platform.
- Quick and easy single person installation Fault codes warning view on LCD display Built-in limiter optional.
- Comply with international quality standards tested by TUV,BV,Dekra etc.
- IP65 ingress protection10+years R&D accumulation and support.

• Product Features

- Big LCD display
- Power export limit
- Wifi/GPRS/Lan communication optional
- Compact and easy to install

• Technical Parameter

Model No	TPI4KTL	TPI5KTL	TPI6KTL	TPI8KTL	TPI10KTL	TPI12KTL	TPI15KTL
Input (DC)							
Max DC power (W)	5500W	6500W	7500W	9500W	11500W	18000W	22500W
Max DC voltage (Vdc)	1000Vd.c.						
Min working voltage (Vdc)	160Vd.c						
MPPT voltage range(Vdc)	160...850Vdc						
Max input current / per string (A)	18A/18A						
Max.input short circuit per MPPT	25A/25A						
Number of MPPT trackers	2						
Strings per MPPT tracker	1						
Output (AC)							
AC nominal power (W)	4000	5000	6000	8000	10000	12000	15000
Max AC apparent power (VA)	5000	6000	7000	8800	11000	13200	16500
Max output current (A)	8	10	12	15	17	20	23
Nominal AC output	50Hz,60Hz(auto-selection) / 44Hz-55Hz; 54Hz-65Hz						
AC output range	45/55 Hz;280~490 Vac (Adj)						
Power factor	0.8leading...0.8laging						
Harmonics	<5%						
Grid type	3 W/N/PE						
Efficiency							
Max efficiency	98.0%	98.2%	98.2%	98.3%	98.4%	98.4%	98.4%
Euro efficiency	97.5%	97.7%	97.7%	97.8%	97.9%	97.9%	98.0%
MPPT efficiency	99.9%						
Safety and Protection							
DC reverse-polarity protection	yes						
DC breaker	yes						
DC/AC SPD	yes						
Leakage curent protection	yes						
Insulation Impedance Detection	yes						
Residual Current protection	yes						
General Parameters							
Dimension (W/H/D)(mm)	480*476*157						
Weight (kg)	16						
Operating temperature range °C	-25 ~ +60						
Degree of protection	IP65						
Cooling concept	Smart Cooling						
Topology	Transformerless						
Display	LCD						
Humidity	0-95%,no condensation						
Communication	RS485/WiFi/GPRS						
Warranty	Standard 5 years, 7/10 years optional						
Certificates and Approvals							
CQC, VDE-AR-N4105,VDE0126-1-1,AS4777,IEC61727,IEC62116							

TPI Series

On Grid Inverter Three Phase

- Monitor system performance in real-time via smartphone app or web portal using out advanced monitoring platform.
- Quick and easy single person installation Fault codes warning view on LCD display Built-in limiter optional.
- Comply with international quality standards tested by TUV,BV,Dekra etc.
- IP65 ingress protection10+years R&D accumulation and support.

• Product Features

- Big LCD display
- Power export limit
- Wifi/GPRS/Lan communication optional
- Compact and easy to install

• Technical Parameter

Model No	TPI17KTL	TPI20KTL	TPI25KTL
Input (DC)			
Max DC power (W)	25500W	30000W	30000W
Max DC voltage (Vdc)	1000Vd.c.		
Min working voltage (Vdc)	250Vd.c		
MPPT voltage range(Vdc)	200...850Vdc		
Max input current / per string (A)	26A/26A		36A/26A
Max.input short circuit per MPPT	34A/34A		46A/34A
Number of MPPT trackers	2		
Strings per MPPT tracker	2		
Output (AC)			
AC nominal power (W)	17000	20000	25000
Max AC apparent power (VA)	18700	22000	27500
Max output current (A)	25	30	41.6
Nominal AC output	50/60 Hz;400 Vac		
AC output range	45/55 Hz;280~490 Vac (Adj)		
Power factor	0.8leading...0.8laging		
Harmonics	<1.5%		
Grid type	3 W/N/PE		
Efficiency			
Max efficiency	98.5%	98.5%	98.5%
Euro efficiency	98.1%	98.1%	98.2%
MPPT efficiency	99.9%	99.9%	99.9%
Safety and Protection			
DC reverse-polarity protection	yes		
DC breaker	yes		
DC/AC SPD	yes		
Leakage curent protection	yes		
Insulation Impedance Detection	yes		
Residual Current protection	yes		
General Parameters			
Dimension (W/H/D)(mm)	520*510*160		
Weight (kg)	23		
Operating temperature range °C	-25 ~ +60		
Degree of protection	IP65		
Cooling concept	Smart Cooling		
Topology	Transformerless		
Display	LCD		
Humidity	0-95%,no condensation		
Communication	RS485/WiFi/GPRS		
Warranty	Standard 5 years,7/10 years optional		
Certificates and Approvals			
CQC, VDE-AR-N4105,VDE0126-1-1,AS4777,IEC61727,IEC62116			

OPS

Solar Inverter

• Features

- Adopts new pure sine-wave inverter topology (THD < 3%) .
- High power density with superior reliability and performance.
- Capable of driving highly reactive & capacitive loads at start moment.
- Advanced DSP control, Input/output isolated design.
- LED indicators display.
- Low power “Power Saving Mode” to conserve energy.
- Surge Rating: 2* Prated.

• Product Dimensions

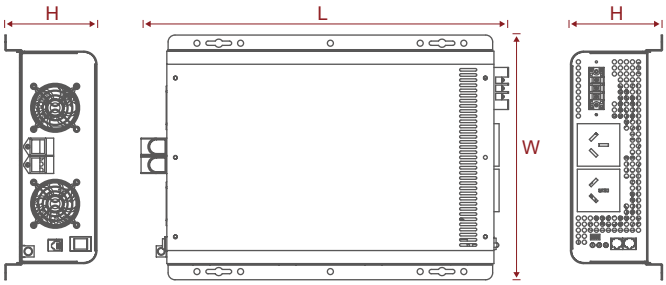

Left view Front view Right view

Model	Size(L*W*H)(mm)
OPS 0.6KW~1KW	270*160*70
OPS 1.5KW~2KW	355*190*95
OPS 3KW~4KW	411*285*122

• Technical Parameter

OPS Series Solar Inverter											
Input	Item	0612	1012	—	2012	0612E	1012E	—	2012E	3012E	—
		0624	1024	1524	2024	0624E	1024E	1524E	2024E	3024E	4024E
	Nominal Voltage	12Vdc(*2 for 24Vdc)									
	Operating Range	10Vdc~15.1Vdc									
	Startup Voltage	11.75Vdc~14.8Vdc									
		Load Level			0~29%		30~69%		70~100%		
	Battery Alarm Level	Battery-low Level			11.3Vdc		11.2Vdc		11.0Vdc		
		Battery-high Level			14.1Vdc		14.0Vdc		13.8Vdc		
	Battery Shut-down Level	Battery-under Level			10.3Vdc		10.2Vdc		10.0Vdc		
		Battery-over Level			15.1Vdc		15.0Vdc		14.8Vdc		
	Battery Recovery Level	Battery-under Recovery			12.5Vdc						
		Battery-over Recovery			14.0Vdc						
Output	Output Waveform	Pure Sine Wave									
	Output Power	600W	1000W	1500W	2000W	600W	1000W	1500W	2000W	3000W	4000W
	Surge Rating	2*Prated									
	Nominal Output Voltage	110/115/120Vac				220/230/240Vac					
	Output Voltage Regulation	± 5%(When input voltage higher than battery-low level)									
	Output Frequency	50/60Hz±0.1%									
	Output Current @ 220/230/240	—				2.73A / 2.61A / 2.50A	4.55A / 4.35A / 4.17A	6.81A / 6.52A / 6.25A	9.10A / 8.70A / 8.34A	13.65A/ 13.05A/ 12.51 A	18.18A/ 17.39A/ 16.67A
	Output Current @110/115/120	5.45A / 5.22A / 5A	9.09A / 8.70A / 8.33A	13.63A/ 13.04A/ 12.50A	18.18A/ 17.39A/ 16.67 A	——					
	Crest Factor	3:1									
	THD	<3%, linear load; <5%, non-linear load(At nominal Input voltage) <15%(At minimum cut-off (10Vdc) level)									
	Peak Output Current @ 220/230/240	—				5.46A / 5.22A / 5.00A	9.10A / 8.70A / 8.34A	13.62A /13.04A /12.50A	18.20A /17.40A /16.68A	273A / 26.1 A / 25.02A	36.36A /34.78A /33.34A
	Peak Output Current @110/115/120	10.92A/ 10.44A / 10A	182A / 17.4A / 16.68A	27.3A / 26.1A / 25A	36.36A/ 34.78A/ 33.34A	—					
	Efficiency	>88% (Typical), 90% (Peak)									
	No load Current Draw	<15W	<15W	<15W	<25W	<20W	<20W	<20W	<30W	<35W	<40W
	Stand-by Current Draw	<6W	<6W	<6W	<10W	<6W	<6W	<6W	<10W	<10W	<10W
	Over Load Protection	Refer to Sec.3.9 and Sec.3.10									

OPS Series Solar Inverter

Environmental	Noise	<50 dB									
	Operating Temperature	Operation temperature: -20 ~ 70°C, -5 ~ 40 °C with full performance									
	Storage Temperature	-30~70°C									
	Operating Humidity	90% RH (No condense)									
	Operating Attitude	1500m									
Mechanical	Dimension L*W*H(mm)	270*160*70	355*190*95		411*285*107	270*160*70	355*190*95		411*285*107	411*285*122	
	Weight (KG)	2.5KG	4.0KG	4.5KG	8.0KG	2.5KG	4.0KG	4.5KG	8.0KG	8.8KG	8.8KG
	Force Cooling	Load and Temperature Controlled Cooling Fan									
Control	Protection	Overload, Short Circuits, Reverse Polarity, Over/ Under Input Voltage, Over Temperature, High Output Voltage, Low Output Voltage, Unit Internal Failure, Unit In-Parallel Failure									
	Startup Time	< 5s									
	Power Saving Recovery Time	5s									
Human Interface	LED Indicator	3-LED installed									
	Audible Alarm	Buzzer									
	Communication Interface	RS232									

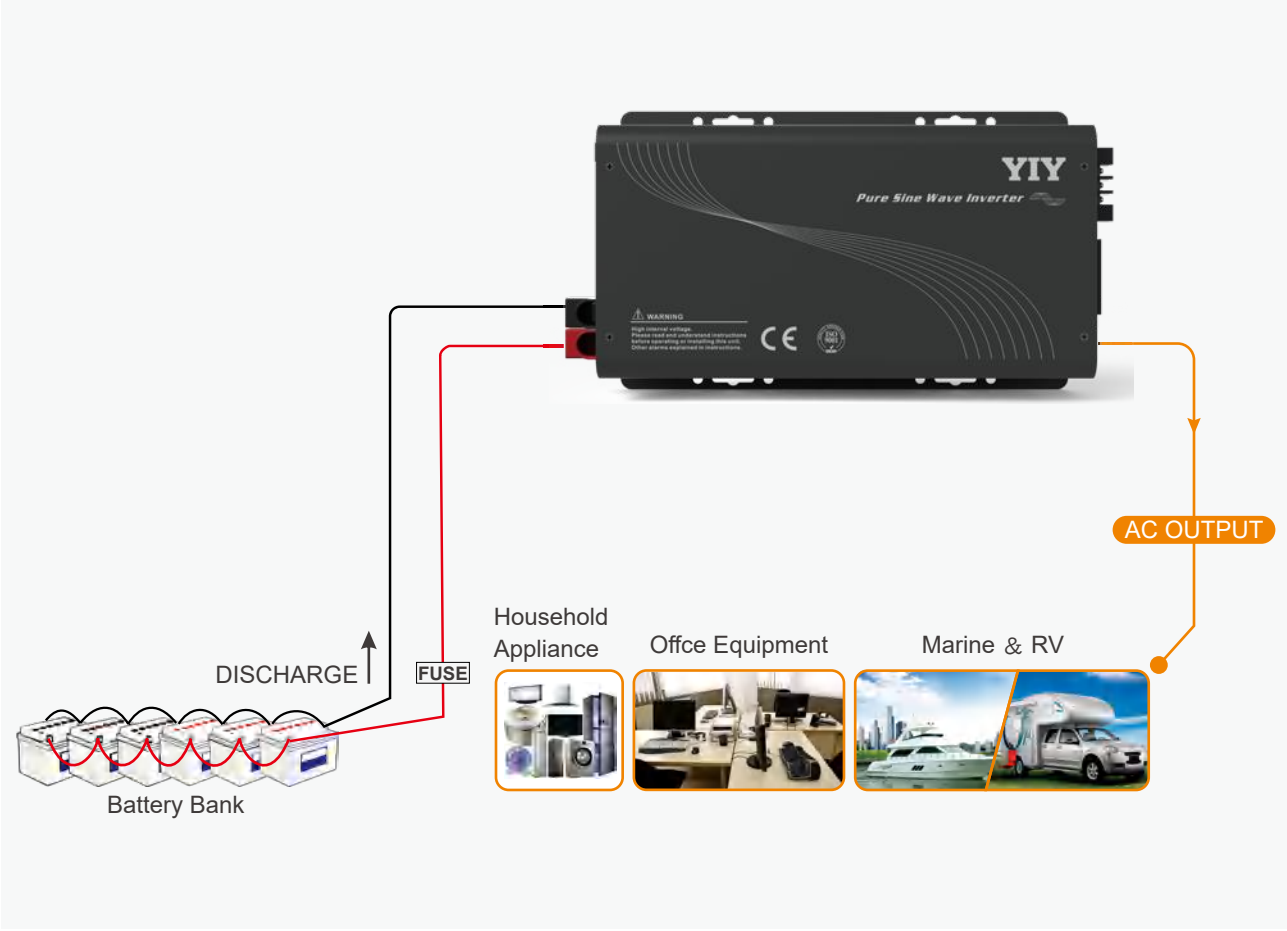

CSB

Battery Charger

• Features

- Three stage timer-based charging algorithm.
- Most suitable for fast battery charging.
- Operate with wider input voltage range.
- With PFC function.
- High efficiency.
- Highly reliable MOSEFET base design.
- Smart fan control.

• Product Dimensions

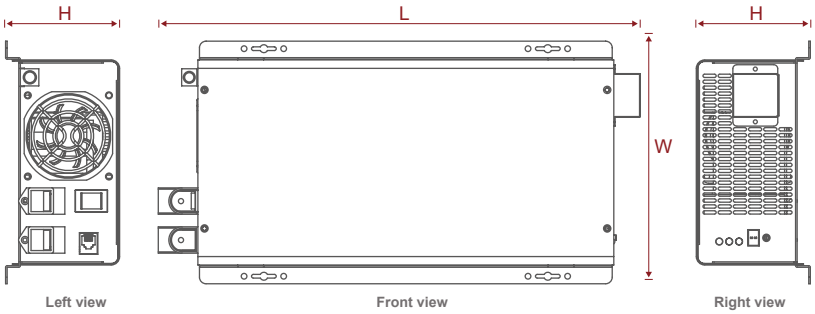

Model	Size(L*W*H)(mm)
CSB 500W	259*134*72.5
CSB 1000W	259*134*72.5
CSB 2000W	315*170*83.5

• Technical Parameter

CSB Series Battery Charger						
Model No.	05H / 05L		10H / 10L		20H / 20L	
Rated Power (W)	500W		1000W		2000W	
Battery Voltage	12/24Vdc	36/48Vdc	12/24Vdc	36/48Vdc	12/24Vdc	36/48Vdc
Output Current (A)	37.5/18.75A	12.5/9.375A	75/37.5A	25/18.75A	150/75A	50/37.5A
Display	LED Display / LCD Display (optional)					
AC Input Voltage Range (Vac)	H : 90-286Vac / L :70-145Vac					
Input Type	AC Plug Cord		AC Plug Cord		CSB20L: 3 PIN Terminal Block CSB20H : AC Plug Cord	
AC Input Frequency	40~70Hz					
Charging Efficiency	≥80%					
Operation Temperature	0°C ~ 50°C					
Storage Temperature	0°C ~ 105°C					
Protection	Over/Under Voltage, Over Temperature, Over Current					
Cooling	Smart fan control (Control by heat sink temperature, charging current)					
Chasis Material	Iron Chasis / Alu. Chasis					
Optional Accessories / Function	BTS; Reverse Polarity Protection; RS232 Comm Module; Battery 0V Charging; Rain Shield					
Product Size (mm) (L*W*H)	259*134*72.5		259*134*72.5		315*170*83.5	
Packing Size (mm) (L*W*H)	346*191*122		346*191*122		415*245*152	
Net Weight (KG)	2.50		2.50		3.50	
Gross Weight (KG)	2.77		2.77		3.92	
Remark	H : Short for High Voltage 220Vac L: Short for Low Voltage 110Vac					

Charge Voltage Select :

Battery Type			12Vdc Model		24Vdc Model		36Vdc Model		48Vdc Model	
DIP Switch	SW1	SW2	Bulk	Float	Bulk	Float	Bulk	Float	Bulk	Float
	0	1	12.2	12	24.4	24	36.6	36	48.8	48
	1	0	13.8	13.6	27.6	27.2	41.4	40.8	55.2	54.4
	1	1	14.2	13.6	28.4	27.2	42.6	40.8	56.8	54.4
	0	0	14.4	13.8	28.8	27.6	43.2	41.4	57.6	55.2

LFP-M IP65

LiFePO4 Battery Pack

• Features

- Grade A LiFePO4 cells.
- Parallel connection up to 9 PCS.
- IP65 Protection.
- 51.2Vdc voltage output suitable for home energy storage system, communication stations and other applications.
- Standard CAN &RS485 communication port, Master & Slave relationship.
- Compatible with other brand inverters' communication protocols.

• Product Dimensions

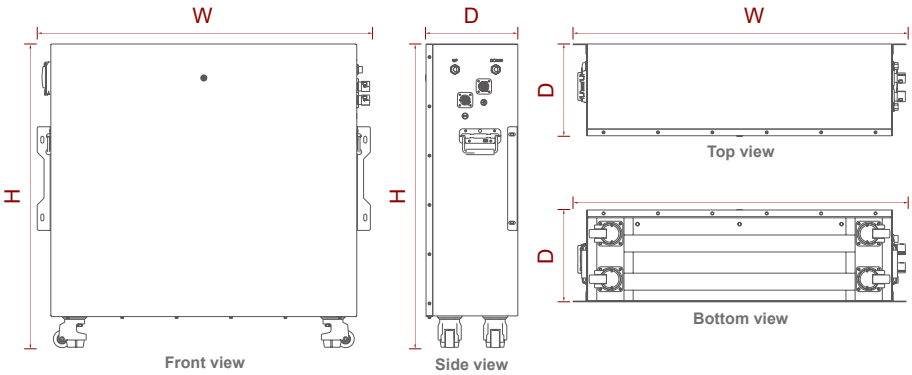

Model	Size(W*D*H)(mm)
LFP-M48105H2	530*183*557
LFP-M48210H	530*183*865
LFP-M48280H	950*316.5*923.5
LFP-M48314H	

• Technical Parameter

LFP-M IP65 Series LiFePO4 Battery Pack				
Specifications				
Model	LFP-M48105H2	LFP-M48210H	LFP-M48280H	LFP-M48314H
Rated Voltage	51.2V			
Rated Capacity	105Ah	210Ah	280Ah	314Ah
Rated Energy	5.37KWH	10.75KWH	14.33KWH	16.07KWH
Cell Configuration	16S1P	16S2P	16S1P	
Battery Cell	3.2V 105AH		3.2V 280AH	3.2V 314AH
Cycles	6000@70%SOH,90%DOD (25℃)		8000@70%SOH,90%DOD (25℃)	
Standard Charge				
Operation temperature range @charging	0~60℃			
Rated charge voltage	56V			
Over charge protection	57.6V			
Allowed MAX charge current	100A	100A	140A	150A
Peak charge current	110A 3S	110A 3S	160A 2S	160A 3S
Rated charge current	50A	100A	140A	150A
Recommended charge method	CC-CV			
Standard Discharge				
Operation temperature range @discharging	-20~60℃			
Output Voltage Range	48~57.6V			
Discharge Cut-off voltage	48V			
Allowed MAX discharge current	100A	100A	140A	150A
Peak discharge current	110A 3S	110A 3S	160A 2S	160A 3S
Rated discharge current	100A	100A	140A	150A
Recommend discharge current	100A	100A	140A	150A
Mechanical Characteristics				
Dimension W*D*H	530*183*557mm	530*183*865mm	950*316.5*923.5mm	
Weight(N.W)	52KG	94KG	130KG	
Communication				
RS485	PC control and monitor			
CAN	Inverter PC control and monitor			
Storage and Transportation Requirements				
Storage Temperature	Less than 1 month	-20~35℃		
	Less than 6 month	-10~30℃		
Storage Humidity	45~75%RH			
SOC	Storage	60~75%SOC		
	Transport	45~55%SOC		

LFP-M IP21

LiFePO4 Battery Pack

• Features

- Grade A LiFePO4 cells.
- Parallel connection up to 9 PCS.
- IP21 Protection.
- 51.2Vdc/25.6Vdc voltage output suitable for home energy storage system, communication stations and other applications.
- Standard CAN &RS485 communication port, Master & Slave relationship.
- Compatible with other brand inverters' communication protocols.

• Product Dimensions

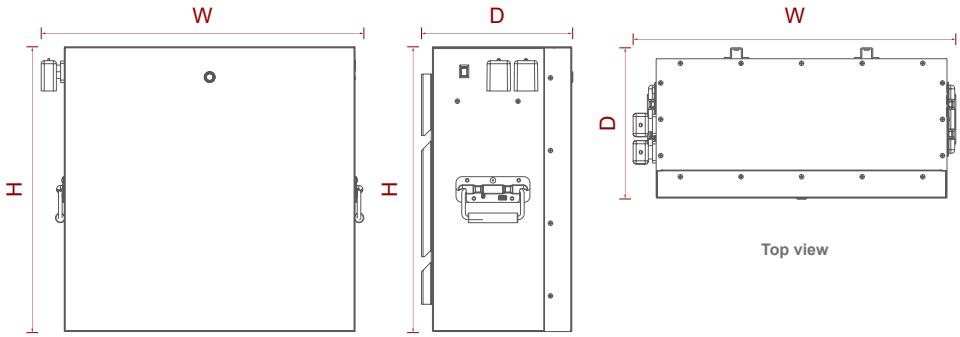

Front view

Side view

Top view

Model	Size(W*D*H)(mm)
LFP-M48100H	460*420*171
LFP-M48206H	480*470*248
LFP-M48314H1	635*570*248
LFP-M24314H1	375*430*263

• Technical Parameter

LFP-M IP21 LiFePO4 Battery Pack				
Specifications				
Model	LFP-M48100H	LFP-M48206H	LFP-M48314H1	LFP-M24314H1
Rated Voltage	51.2V			25.6V
Rated Capacity	100Ah	206Ah	314Ah	314Ah
Rated Energy	5.12kWH	10.54KWH	16.07KWH	8.03KWH
Cell Configuration	16S1P			8S1P
Battery Cell	3.2V 100AH	3.2V 206Ah	3.2V 314Ah	3.2V 314AH
Cycles	3000@80%SOH, 90%DOD (25°C)	4000@80%SOH, 90%DOD (25°C)	8000@70%SOH, 90%DOD (25°C)	8000@70%SOH, 90%DOD (25°C)
Standard Charge				
Operation temperature range @charging	0~55°C			
Rated charge voltage	56V			28V
Over charge protection	57.6V			28.8V
Allowed MAX charge current	100A	150A		150A
Peak charge current	110A 3S	160A 3S		160A 3S
Rated charge current	50A	150A		150A
Recommended charge method	CC-CV			
Standard Discharge				
Operation temperature range @discharging	-10~60°C			
Output Voltage Range	48~57.6V			24~28.8V
Discharge Cut-off voltage	48V			24V
Allowed MAX discharge current	100A	150A		150A
Peak discharge current	110A 3S	160A 3S		160A 3S
Rated discharge current	100A	150A		150A
Recommend discharge current	100A	150A		150A
Mechanical Characteristics				
Dimension (W*D*H) (mm)	460*420*171	480*470*248	635*570*248	375*430*263
Weight(N.W)	52KG	80KG	130KG	60KG
Communication				
RS485	PC control and monitor			
CAN	Inverter PC control and monitor			
Storage and Transportation Requirements				
Storage Temperature	Less than 1 month	-20~35°C		
	Less than 6 month	-10~30°C		
Storage Humidity	45~75%RH			
SOC	Storage	60~75%SOC		
	Transport	45~55%SOC		

LFP-M-R

Rack Type LiFePO4 Battery Pack

• Features

- Up to 5 layers can be stacked ,unified convergence.
- IP21 Protection.
- 51.2Vdc 16.07KWH /14.33KWH /5.12KWH rated capacity.
- 51.2Vdc voltage output suitable for home energy storage system, small commercial scenarios and other applications.
- Standard CAN &RS485 communication port, can meet the requirement of several packages to connect in parallel, Master & Slave relationship, Monitor and other functions.Compatible with other brand inverters' communication protocols.

• Product Dimensions

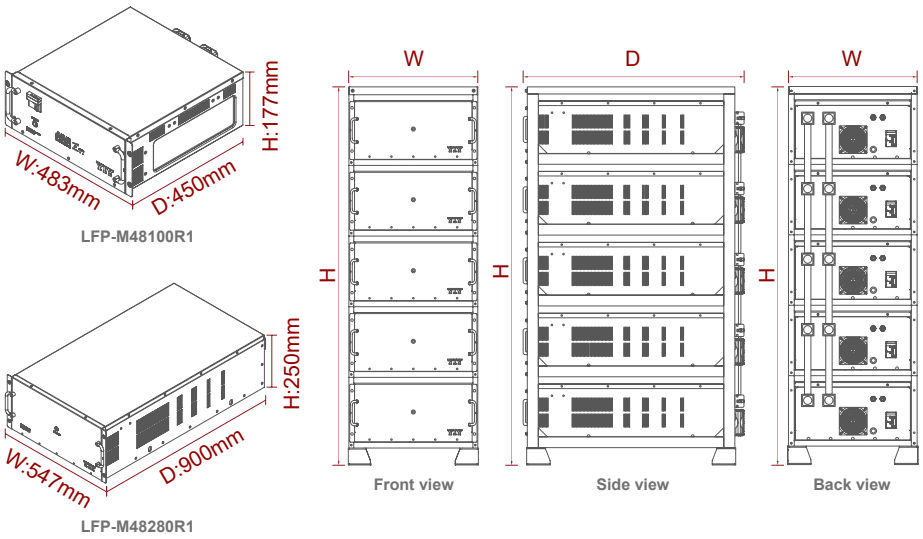

5-Layer Rack Size:

Model	Size(W*D*H)(mm)
LFP-M48100R1	490*450*1286.5
LFP-M48280R1	561*904*1636.5
LFP-M48314R1	

• Technical Parameter

LFP-M Rack type LiFePO4 Battery Pack			
Specifications			
Model	LFP-M48100R1	LFP-M48280R1	LFP-M48314R1
Rated Voltage	51.2V		
Rated Capacity	100AH	280Ah	314Ah
Rated Energy	5.12KWH	14.33KWH	16.07KWH
Cell Configuration	16S1P		
Battery Cell	3.2V 100AH	3.2V 280AH	3.2V 314AH
Cycles	6000@70%SOH,90%DOD (25°C)	8000@70%SOH,90%DOD (25°C)	
Standard Charge			
Operation temperature range @charging	0~60°C		
Rated charge voltage	56.8V		
Max charge voltage	58.4±0.4V		
Over charge protection	59.2V		
Allowed MAX charge current	100A	140A	150A
Peak charge current	110A 3S	160A 2S	160A 3S
Rated charge current	50A	140A	150A
Recommended charge method	CC-CV		
Standard Discharge			
Operation temperature range @discharging	-20~60°C		
Output Voltage Range	44.8~57.6V		
Discharge Cut-off voltage	42.4V		
Allowed MAX discharge current	110A	140A	150A
Peak discharge current	110A 3S	160A 2S	160A 3S
Rated discharge current	100A	140A	150A
Recommend discharge current	100A	140A	150A
Mechanical Characteristics			
Dimension W*D*H	483*450*177mm	547*900*250mm	
Weight(N.W)	52KG	130KG	
Communication			
RS485	PC control and monitor		
CAN	Inverter PC control and monitor		
Storage and Transportation Requirements			
Storage Temperature	Less than 1 month	-20~35°C	
	Less than 6 month	-10~30°C	
Storage Humidity	45~75%RH		
SOC	Storage	60~75%SOC	
	Transport	45~55%SOC	

PV Combiner Box

With Built-in MPPT

• Features

- IP65 protection grade, can be installed outdoor.
- Integrated MPPT modular.
- System Voltage 48 VDC.
- Number of PV inputs,2 Strings & 3 Strings & 6 Strings.
- Anti-backflow protection.
- Reverse connection protection.

• Product Dimensions

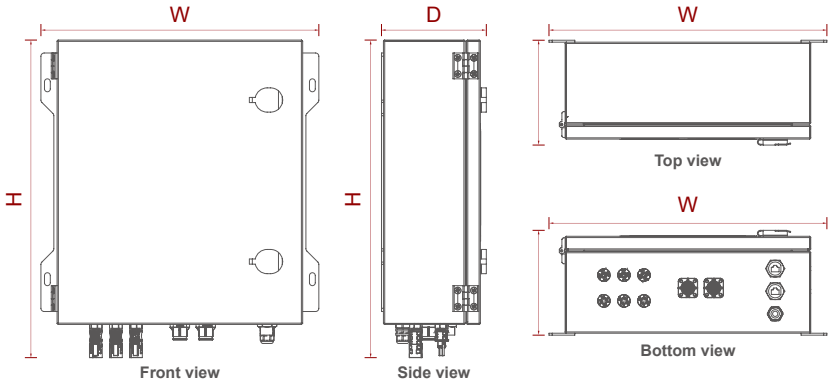

Model	Size(W*D*H)(mm)
20A	280*190*140
40A	390*360*140
60A	430*163*492
120A	520*163*778

• Technical Parameter

PV Combiner Box				
Model	20A	40A	60A	120A
Nominal System Voltage	48 VDC			
Max. Battery Current	20 Amp	40 Amp	60 Amp	120 Amp
Max. Solar Input Voltage	100V		150V	
PV Array MPPT Voltage Range	30~100VDC		(Bat. Voltage+5V)~115VDC	
Max.Input Power	1000 Watt	2000 Watt	3200 Watt	6400 Watt
Protections	Solar high voltage disconnect;Solar high voltage reconnect; Battery high voltage disconnect;Battery high voltage reconnect; High temperature disconnect;High temperature reconnect			
Charging Algorithm	3-Step			
Charging Stages	Bulk, Absorption, Float			
Charging Set Points	Absorption Stage/Float Stage			
Flooded Battery	58.4V/54V			
AGM/Gel Battery (Default)/Customized	56.4V/54V			
Over-charging Voltage	60V			
Over-charging Comeback Voltage	58V			
Battery Defect Voltage	34V			
Battery Defect Comeback Voltage	36V			
Number Of PV Inputs	2 Strings	2 Strings*2	3 Strings	6 Strings
Number Of DC Outputs	1 (Support customization for output number)			
Protection Level	IP65			
Application	Solar PV System/Energy Storage System			
DC Fuse	/	250VDC 50A		
Connection Type DC Input	PV MC4 Connector, IP65			
Over Current Protection	Yes			
Short Circuit Protection	Yes			
Surge Protection	Yes			

MPPT SCM4860

Advanced MPPT Solar Charger Controller

• Features

- Intelligent Max. Power Point Tracking technology increases efficiency 25%~30%.
- Compatible for PV systems in 12V,24V or 48V.
- Three-stage charging optimizes battery performance.
- Max. charging current up to 60A.
- Max. efficiency up to 98%.
- Battery Temperature Sensor (BTS) automatically provides temperature compensation.
- Automatic battery voltage detection.
- Support wide range of lead-acid batteries including wet, AGM and gel batteries, LiFePO4 battery packs.

• Product Dimensions

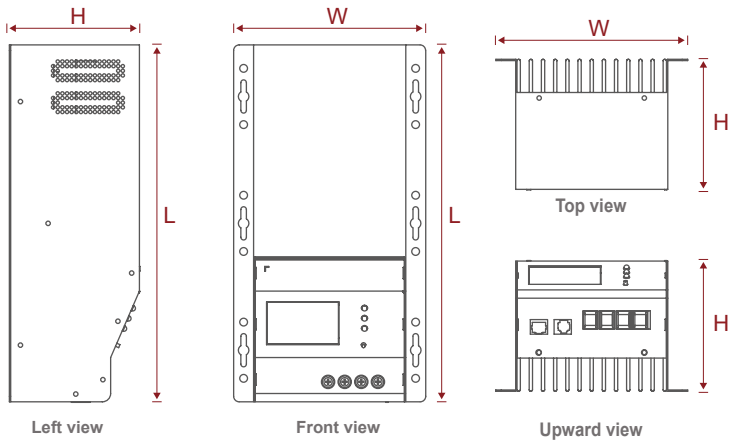

Model	Size(L*W*H)(mm)
MPPT 3KW	322*173*118

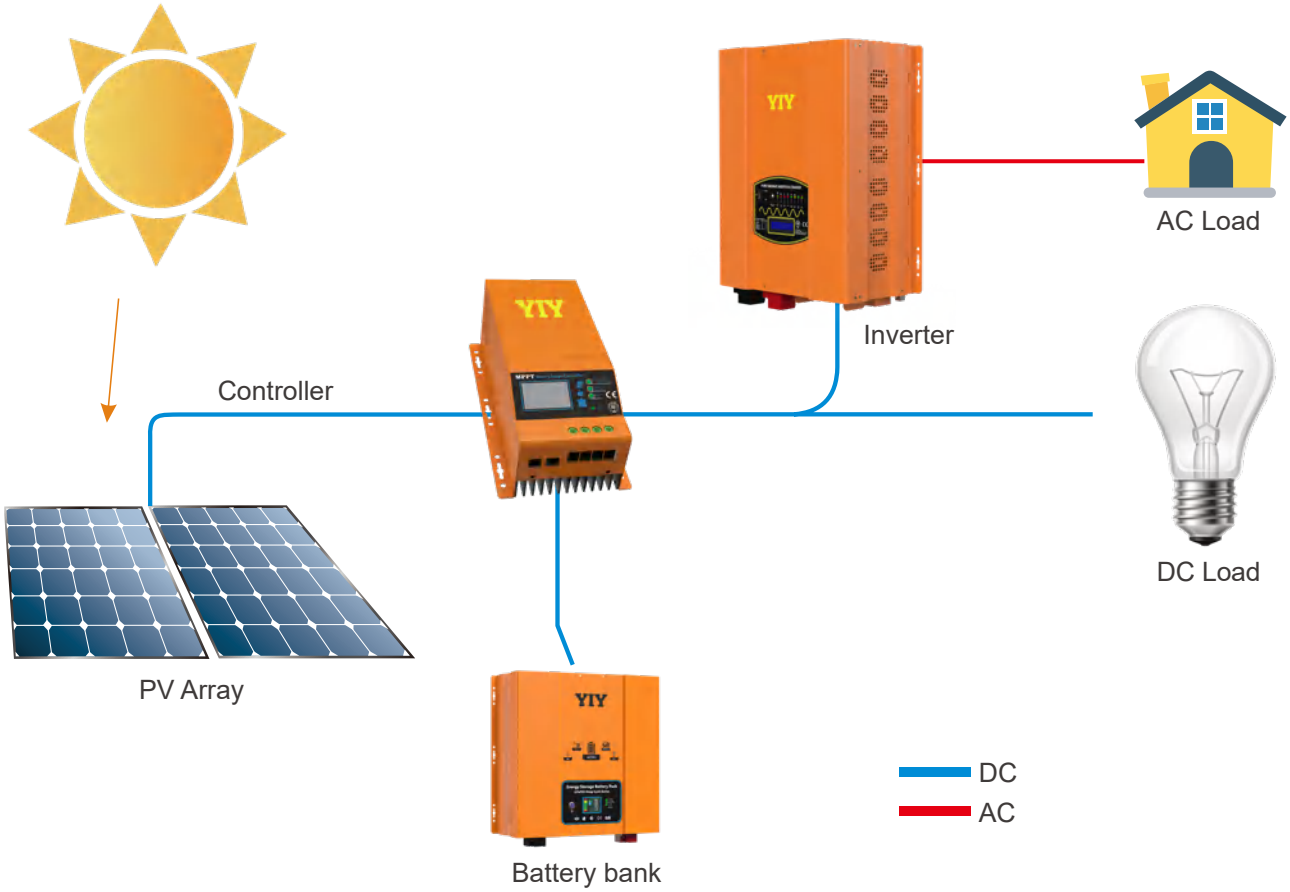

• Technical Parameter

MPPT Solar Charge & Discharge Controller				
Model	3KW	Charging Set points	Absorption Stage	Float Stage
Nominal System Voltage	12, 24, or 48 VDC (Auto detection)	Flooded Battery	14.6 / 29.2 / 58.4Vdc	13.5 / 27 / 54Vdc
Maximum Battery Current	60 Amp	AGM/Gel Battery (Default)	14.1 / 28.2 / 56.4Vdc	13.5 / 27 / 54Vdc
Maximum Solar Input Voltage	145Vdc	Over-charging Voltage	15Vdc / 30Vdc / 60Vdc	
PV Array MPPT Voltage Range	(Bat. Voltage+5)-115Vdc	Overcharging Comeback Voltage	14.5Vdc / 29Vdc/ 58Vdc	
Max. Input Power	12 Volt--800 Watts 24 Volt--1600 Watts 48 Volt--3200 Watts	Battery Defect Voltage	8.5Vdc/ 17Vdc/ 34Vdc	
Transient Surge Protection	4500 Watts / port	Battery Defect Comeback Voltage	9Vdc / 18Vdc / 36Vdc	
Temperature Compensation Coefficient	Volt-5 mV/°C/ cell (25 °C ref.)	Mechanical And Environment	Product size (L*W*H mm)	322*173*118
Temperature Compensation	0°C ~ 50°C	Product Weight (KG)	4.8	
Charging Stages	Bulk, Absorption, Float	Enclosure	IP31 (indoor & vented)	

560W-600W Solar Panel

Bifacial Monocrystalline Module

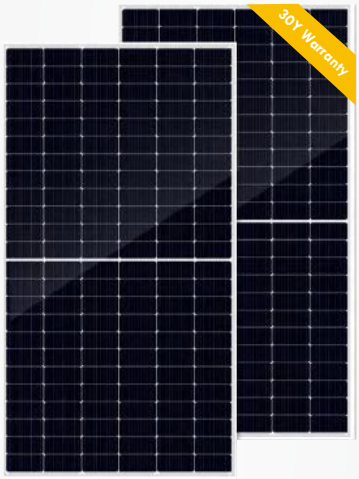

• Features

- Higher Power Output
- Multi Busbar Technology
- PID Resistance
- Low-light Performance
- Durability Against Extreme Environmental Conditions
- EL Full Inspection

• Technical Parameter

Specifications(BNPI)

Rated Power in Watts-Pmax(Wp)	619.1	624.9	629.9	635.3	641.1	647.0	652.5	658.8	665.2
Open Circuit Voltage-Voc(V)	52.65	52.81	52.97	53.13	53.29	53.45	53.61	53.77	53.93
Short Circuit Current-Isc(A)	14.81	14.91	14.98	15.05	15.13	15.21	15.28	15.34	15.41
Max. Power Voltage-Vmpp(V)	44.32	44.46	44.59	44.81	45.04	45.26	45.48	45.70	45.92
Max. Power Current-Impp(A)	13.97	14.06	14.13	14.18	14.24	14.30	14.35	14.42	14.49
Power Tolerance	0~+3%								
Operating Temperature	-40°C~85°C								

*BNPI: Irradiance: front 1000W/m², rear 135W/m², Cell Temperature 25°C, AM=1.5

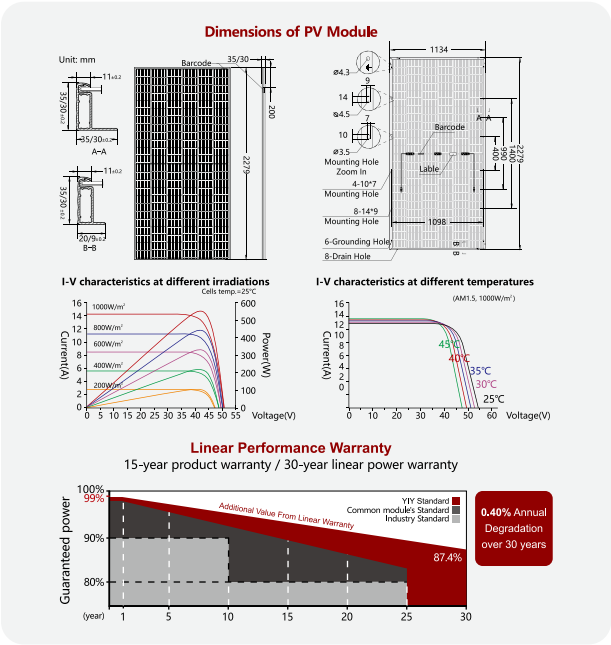

Electrical Characteristics (STC*)

Rated Power in Watts-Pmax(Wp)	560	560	570	575	580	585	590	595	600
Open Circuit Voltage-Voc(V)	52.45	52.45	52.77	52.93	53.09	53.26	53.41	53.57	53.73
Short Circuit Current-Isc(A)	13.47	13.47	13.62	13.69	13.76	13.83	13.89	13.95	14.01
Max. Power Voltage-Vmpp(V)	44.12	44.12	44.39	44.61	44.84	45.06	45.28	45.50	45.72
Max. Power Current-Impp(A)	12.71	12.71	12.85	12.90	12.95	13.00	13.06	13.12	13.18
Module Efficiency(%)	21.67	21.67	22.06	22.25	22.44	22.6	22.8	23.02	23.22
Maximum System Voltage	1500V DC								
Fuse Rating(A)	30								
Temperature Coefficient Pmax	-0.29%/°C								
Temperature Coefficient Isc	0.045%/°C								
Temperature Coefficient Voc	-0.25%/°C								
Refer. Bifacial Factor	ΦIsc=80%±10%,ΦVoc=100%±3%,ΦPmax=80%±10%								

*STC: Irradiance 1000W/m², module temperature 25°C , AM=1.5

Mechanical Characteristics

Number of Cells	144pcs
Type of Cell	N-TOPCon Mono
Thickness of Glass(mm)	2.0
Type of Frame	Anodized Aluminum Alloy
Size of Module(mm)	2279×1134×30
Weight(kg)	32
Junction Box	IP68, 1500V DC, 3 Diodes
Cables/Connectors	4.0mm², MC4 compatible
Length of Cable	+300mm/-200mm Length can be customized(connector included)

Packaging Configuration

Height of Modules (mm)	35	30
Number of Modules Per Pallet	31	36
Packaging Box Dimensions (l×w×h) (mm)	2300×1120×1260	2300×1120×1260
Box Gross Weight (kg)	1020	1180
Number of Modules Per 40ft (HQ) Container	620	720
Number of Pallets Per 40ft (HQ) Container	20	20

600W-630W Solar Panel

Bifacial Monocrystalline Module

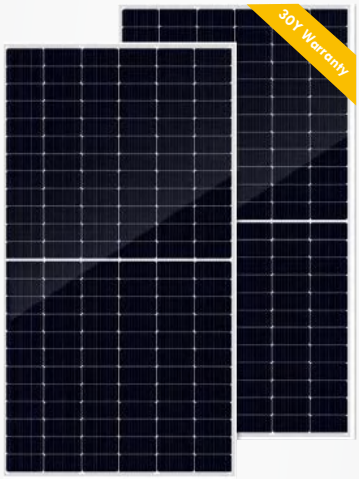

• Features

- Higher Power Output
- Multi Busbar Technology
- PID Resistance
- Low-light Performance
- Durability Against Extreme Environmental Conditions
- EL Full Inspection

• Technical Parameter

Electrical Characteristics (STC*)

Rated Power In Watts-Pmax(Wp)	600	605	610	615	620	625	630
Open Circuit Voltage-Voc(V)	48.40	48.70	49.00	49.30	49.60	49.80	50.30
Short Circuit Current-Isc(A)	15.80	15.83	15.86	15.89	15.91	15.93	15.94
Max. Power Voltage-Vmpp(V)	40.30	40.50	40.80	41.10	41.40	41.60	42.00
Max. Power Current-Impp(A)	14.91	14.94	14.96	14.98	14.99	15.00	15.01
Module Efficiency(%)	22.20	22.40	22.60	22.80	23.00	23.10	23.32
Maximum System Voltage	1500V DC						
Fuse Rating(A)	30						
Temperature Coefficient Pmax	-0.30%/°C						
Temperature Coefficient Isc	0.046%/°C						
Temperature Coefficient Voc	-0.25%/°C						
Refer. Bifacial Factor	80±5%						

*STC: Irradiance 1000W/m², module temperature 25°C , AM=1.5

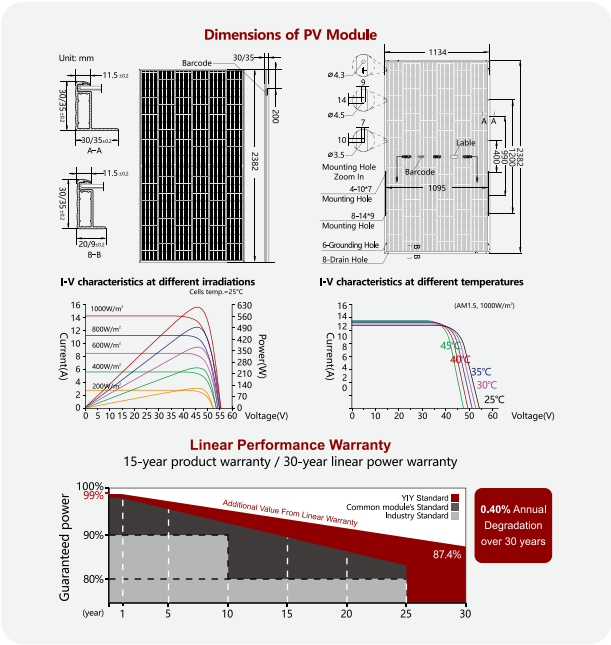

Working Characteristics (NOCT*)

Rated Power In Watts-Pmax(Wp)	457	461	465	469	473
Open Circuit Voltage-Voc(V)	37.75	37.92	38.09	38.26	38.44
Short Circuit Current-Isc(A)	12.11	12.16	12.21	12.26	12.31
Max. Power Voltage-Vmpp(V)	46.03	46.22	46.41	46.60	46.70
Max. Power Current-Impp(A)	12.86	12.92	12.98	13.04	13.10
Power Tolerance	0~+3%				
NOCT	45°C ±2°C				
Operating Temperature	-40°C ~85°C				

*NOCT: Irradiance 800W/m², ambient temperature 20°C , wind speed 1m/s

Electrical characteristics with different rear side power gain

	Pmax/W	Voc/V	Isc/A	Vmpp/V	Impp/A
5%	661	50.30	16.74	42.00	15.76
10%	693	50.30	17.53	42.00	16.51

The additional gain from the rear side compared to the power of the front side at the standard test condition.
It depends on mounting (structure, height, tilt angle etc.) and albedo of the ground.

Mechanical Characteristics

Number of Cells	132pcs
Type of Cell	N-TOPCon Mono
Thickness of Glass(mm)	2.0
Type of Frame	Anodized Aluminum Alloy
Size of Module(mm)	2382×1134×35/30
Weight(kg)	33
Junction Box	IP68, 1500V DC 3 Diodes;Cables/connectors; 4.0mm², MC4 compatible
Length of Cable	+300mm/-200mm Length can be customized(connector included)

Packaging Configuration

Height of Modules (mm)	35	30
Number of Modules Per Pallet	31	36
Packaging Box Dimensions (l×w×h) (mm)	2485×1120×1260	1260×1120×2595
Box Gross Weight (kg)	955	1225
Number of Modules Per 40ft (HQ) Container	496	720
Number of Pallets Per 40ft (HQ) Container	20	20

685W-730W Solar Panel

Bifacial Monocrystalline Module

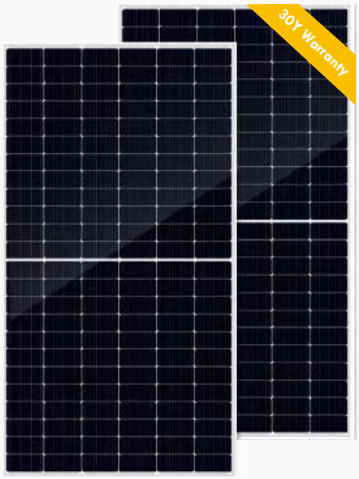

• Features

- Higher Power Output
- Multi Busbar Technology
- PID Resistance
- Low-light Performance
- Durability Against Extreme Environmental Conditions
- EL Full Inspection

• Technical Parameter

Specifications(BNPI)

Rated Power in Watts-Pmax(Wp)	758.9	764.7	769.3	774.8	780.6	785.7	791.6	797.1	802.6	808.6
Open Circuit Voltage-Voc(V)	47.90	48.10	48.50	48.80	49.00	49.20	49.40	49.60	49.80	50.00
Short Circuit Current-Isc(A)	20.06	20.11	20.15	20.19	20.24	20.28	20.33	20.37	20.41	20.46
Max. Power Voltage-Vmpp(V)	40.10	40.30	40.50	40.70	40.90	41.10	41.30	41.50	41.70	41.90
Max. Power Current-Impp(A)	18.93	18.98	19.00	19.04	19.09	19.12	19.17	19.21	19.25	19.30
Power Tolerance	0~+3%									
Operating Temperature	-40°C~85°C									

*BNPI: Irradiance: front 1000W/m², rear 135W/m², Cell Temperature 25°C, AM=1.5

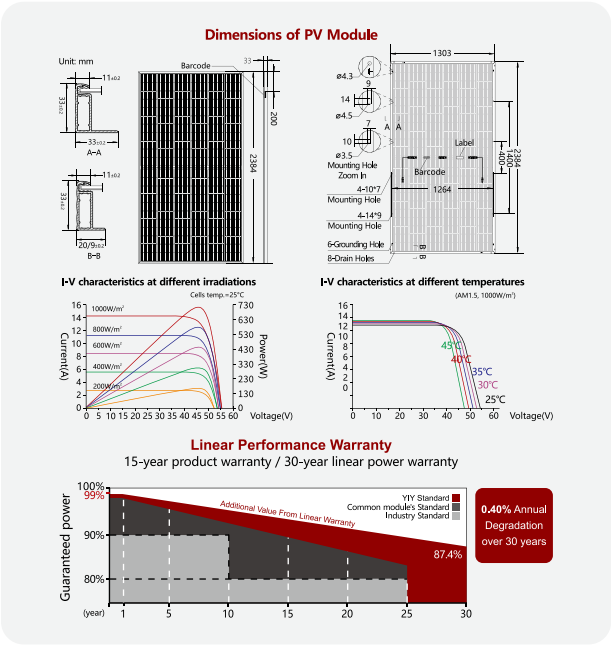

Electrical Characteristics (STC*)

Rated Power in Watts-Pmax(Wp)	685	690	695	700	705	710	715	720	725	730
Open Circuit Voltage-Voc(V)	47.70	47.90	48.30	48.60	48.80	49.00	49.20	49.40	49.60	49.80
Short Circuit Current-Isc(A)	18.21	18.25	18.28	18.32	18.36	18.40	18.44	18.48	18.52	18.56
Max. Power Voltage-Vmpp(V)	39.90	40.10	40.30	40.50	40.70	40.90	41.10	41.30	41.50	41.70
Max. Power Current-Impp(A)	17.19	17.23	17.25	17.29	17.33	17.36	17.40	17.44	17.48	17.52
Module Efficiency(%)	22.05	22.21	22.37	22.53	22.70	22.86	23.02	23.18	23.34	23.50
Maximum System Voltage	1500V DC									
Fuse Rating(A)	30									
Temperature Coefficient Pmax	-0.30%/°C									
Temperature Coefficient Isc	0.046%/°C									
Temperature Coefficient Voc	-0.25%/°C									
Refer. Bifacial Factor	ΦIsc=80%±10%,ΦVoc=100%±3%,ΦPmax=80%±10%									

*STC: Irradiance 1000W/m², module temperature 25°C , AM=1.5

Mechanical Characteristics

Number of Cells	132pcs
Type of Cell	N-TOPCon Mono
Thickness of Glass(mm)	2.0
Type of Frame	Anodized Aluminum Alloy
Size of Module(mm)	2384×1303×33
Weight(kg)	37.5
Junction Box	IP68, 1500V DC, 3 Diodes
Cables/Connectors	4.0mm², MC4 compatible
Length of Cable	+350mm/-250mm Length can be customized(connector included)

Packaging Configuration

Height of Modules (mm)	33
Number of Modules Per Pallet	33
Packaging Box Dimensions (l×w×h) (mm)	1326×1140×2515
Box Gross Weight (kg)	1280
Number of Modules Per 40ft (HQ) Container	594
Number of Pallets Per 40ft (HQ) Container	18

YIY

Start Digital Power Supply

ZHEJIANG YIYEN HOLDING GROUP CO.,LTD

Tel: +86-577-27772199 27772139

Email: yiyen@yiyen.com

Website: www.yiyen.com

ESS Website: www.yiybess.com

WENZHOU YIYEN SUPPLY CHAIN MANAGEMENT CO.,LTD

Add: Rm.1301.Building 3.Headquarters Economic Park .No.6688 Xuyang Road. Yueqing City. 325600.Zhejiang

LISHUI YIYEN TECHNOLOGY CO.,LTD

Add:No.77,Xiang Long Road,Lian Du Zone,Lishui City,Zhejiang Province, China

V2026010-1